MODEL:	REV:	CHANGE LIST:
ZL1 MotherBoard	1A	BOM RELEASE
	1B	1. ADD SECOND SOURCE P/N IN BOM 2. UPDATE VRAM P/N 3. ADD U12 IN BOM
	2A	PAGE2 . 1.UN-STUFF R392 FOR THERMTRIP 2. STUFF NUTS PAGE5 . 1.ADD +3V FOR LCD EDID 2.MODIFY C528 VALUE PAGE8 . 1.STUFF R204 FOR THERMTRIPS PAGE12. 1.ADD 10/100 CO LAYOUT CIRCUIT PAGE13. 1.ADD PR_INSERT# FOR SYSTEM CIRCUIT 2.MODIFY LAN SWITCH POWER PAGE14. 1.ADD PR_INSERT# FOR SYSTEM CIRCUIT PAGE15. 1.ADD RBAYID1 PULL DOWN RESISTOR PAGE18. 1.MODIFY FOR AUDIO QUALITY PAGE19. 1.MODIFY FOR AUDIO QUALITY PAGE20. 1.ADD EMI SOLUTION PAGE22. 1.MODIFY PR_INSERT# PULL HIGH VOLTAGE PAGE23. 1.STUFF PC45 FOR VGA_CORE 2. MODIFY 2.5V_VGA POWER PAGE24. 1.MODIFY GPAR PULL HIGH RESISTOR 2. ADD PULL HIGH FOR I2C BUS PAGE27. 1.MODIFY CS PIN FOR 128MB VRAM PAGE28. 1.MODIFY LED CIRCUIT 2. MODIFY Q34 TO 2N7002 PAGE29. 1.MODIFY MAX6648_OV# CIRCUIT PAGE32. 1.MODIFY CPU CORE VOLTAGE LEVEL PAGE33. 1.MODIFY CHARGER CIRCUIT PAGE34. 1.MODIFY CHARGER CIRCUIT
	2B	PAGE18. 1.MODIFY FOR AUDIO QUALITY PAGE22. 1.MODIFY COM PORT QUALITY
	2C	PAGE02. 1.MODIFY MAX6648_AL# TO HIGH ACTIVE PAGE11. 1.MODIFY FOR SIGNAL QUALITY PAGE12. 1.MODIFY LAN LED 2. MODIFY LAN TRACE PULL HIGH PAGE13. 1.MODIFY LAN LED 2. MODIFY DVO_AVDD PAGE14. 1.MODIFY RGB BEAD VALUE PAGE16. 1.REMOVE COMMON MODE CHOKE PAGE17. 1.MODIFY 3 IN 1 CARD READER FOOTPRINT PAGE18. 1.MODIFY LINE IN SIGNAL PAGE19. 1.MODIFY LINE IN SIGNAL PAGE20. 1.MODIFY USB COMMON MODE CHOKE 2. MODIFY MINI-PCI 3V_S5 TO 3VSUS PAGE21. 1.MODIFY 97551 PIN 21 PAGE22. 1.MODIFY U30 PIN23 TO +5V PAGE23. 1.MODIFY FOR EMI SOLUTION PAGE24. 1.ADD EMI SOLUTION PAGE28. 1.MODIFY PWRLED2 TO +3V 2. ADD TP ESD PROTECT 3. MODIFY LED CIRCUIT PAGE29. 1.MODIFY FOR POWER SUHTDOWN ISSUE PAGE31. 1.MODIFY FOR EMI SOLUTION PAGE32. 1.CHANGE SOURCE PAGE34. 1.MODIFY CHARGER CIRCUIT FOR COST DOWN
	3A	PAGE13. 1.MODIFY LAN CABLE CONNECTOR FOOTPRINT PAGE16. 1.ADD MULTI FUNCTION PIN FM_LED PAGE17. 1.ADD TI SUGGESTION CIRCUIT PAGE18. 1.MODIFY BEEP VALUE PAGE19. 1.MODIFY L77 & L78 TO RESISTOR PAGE20. 1.MODIFY SPRING QUANTITY PAGE28. 1.MODIFY LED RESISTOR VALUE PAGE29. 1.MODIFY LM358ADR CIRCUIT PAGE33. 1.MODIFY LM393ADR CIRCUIT PAGE34. 1.MODIFY LM393ADR CIRCUIT
	3B	PAGE06. 1.MODIFY NB VCCASM BEAD (L30)
	3C	PAGE02. 1.MODIFY R598,R599 TO 0402 SIZE PAGE05. 1.DELETE C528 FOR PCB BURN ISSUE PAGE22. 1.DELETE D3 FOR COM PORT LOOKBACK TEST SOMETIMES FAIL ISSUE PAGE24. 1.UN-STUFF PAD5,PAD6 FOR SMT PRODUCTION SMOOTHLY PAGE29. 1.DELETE PC88 FOR ENHANCE 12V OVERSHUT
	3D	PAGE23. 1.MODIFY VGA_CORE POWER TO 1.3V

MODEL : ZL1 MB

PAGE	FROM	TO
1	1A	
2	3C	
3	1A	
4	1A	
5	3C	
6	3B	
7	1A	
8	2A	
9	1A	
10	1A	
11	2C	
12	2C	
13	3A	
14	2C	
15	2A	
16	3A	
17	3A	
18	3A	
19	3A	
20	3A	
21	2C	
22	3C	
23	2C	3D
24	3C	
25	1A	
26	1A	
27	2A	
28	3A	
29	3C	
30	1A	
31	2C	
32	2C	
33	3A	
34	3A	

Quanta Computer Inc.	PROJECT : ZL1	APPROVE BY: JIM HSU	DRAWING BY:JACKY CHENG	REV 3D
	MB ASSY'S P/N : 31ZL1MB0012	PROJECT LEADER: JIM HSU	DOCUMENT NO: 204	DATE :2004/08/19

COVER SHEET 1 OF 1

KESTREL (ZL1)

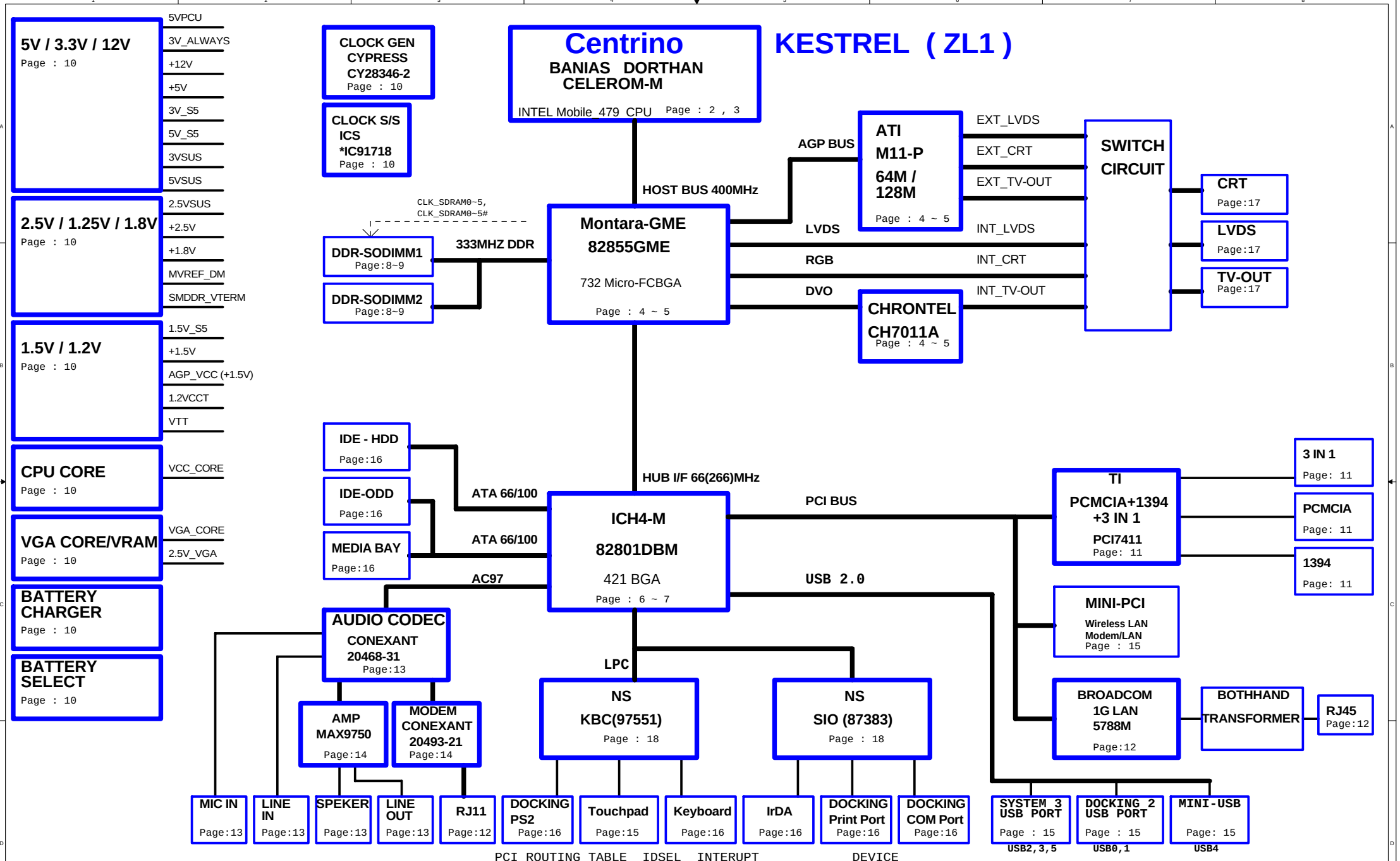

PCI ROUTING TABLE	IDSEL	INTERUPT	DEVICE
		INTA#	M11
REQ0# / GNT0#	AD18	INTD#	BROADCOM LAN
REQ1# / GNT1#	AD20	INTB# , INTC#	MINI-PCI
REQ2# / GNT2#	AD23		
REQ3# / GNT3#	AD22	INTE#,INTF#,INTG#	TI 7411

PROJECT : ZL1

Quanta Computer Inc.

Size	Document Number	Rev
	BLOCK DIAGRAM	1A

Date: Monday, August 23, 2004 Sheet 1 of 34

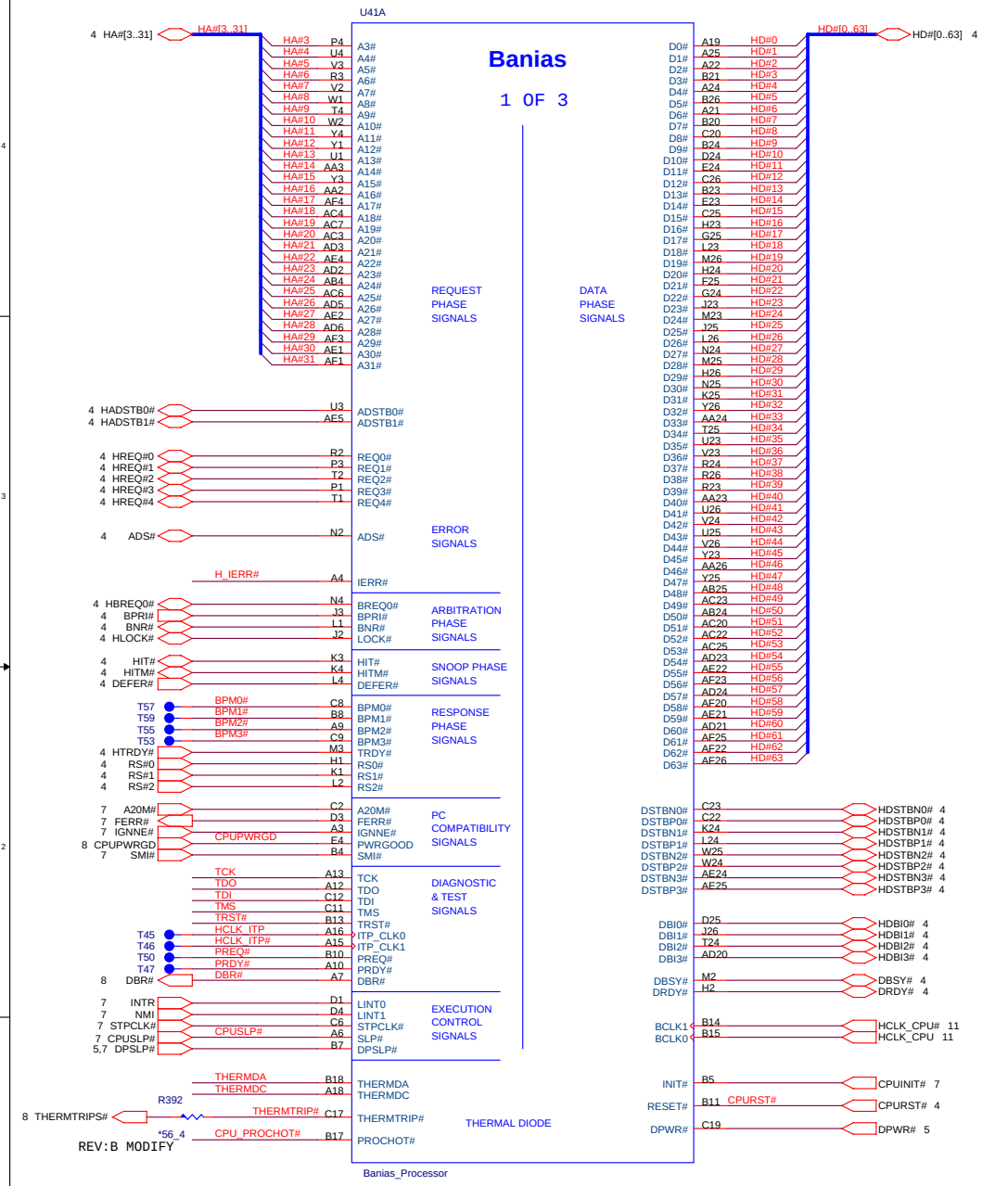

H/W MONITOR

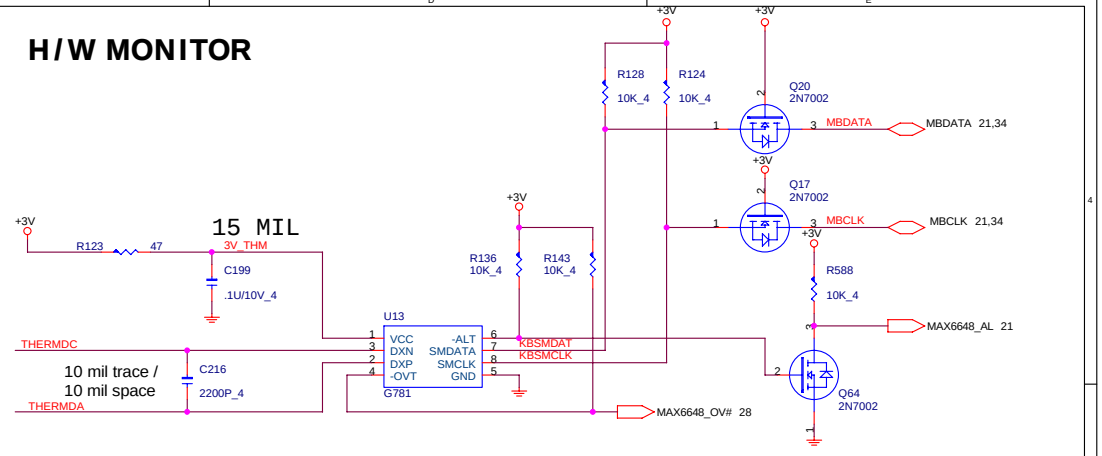

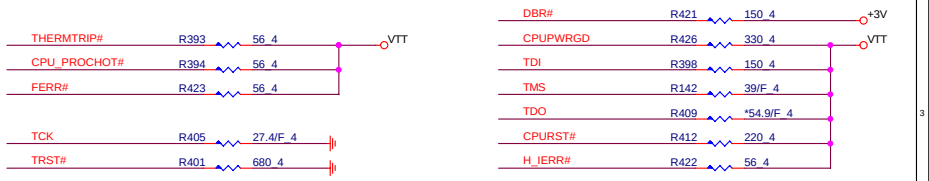

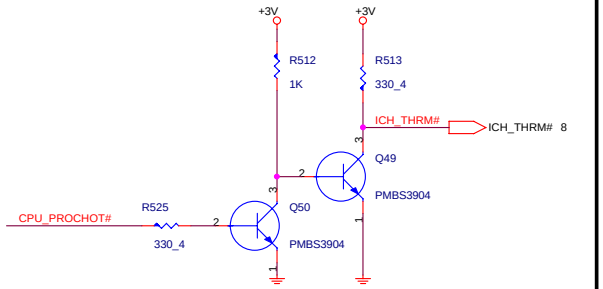

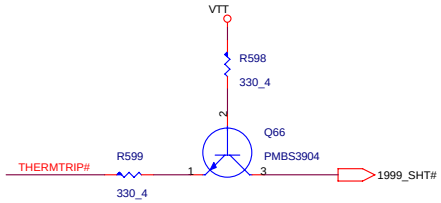

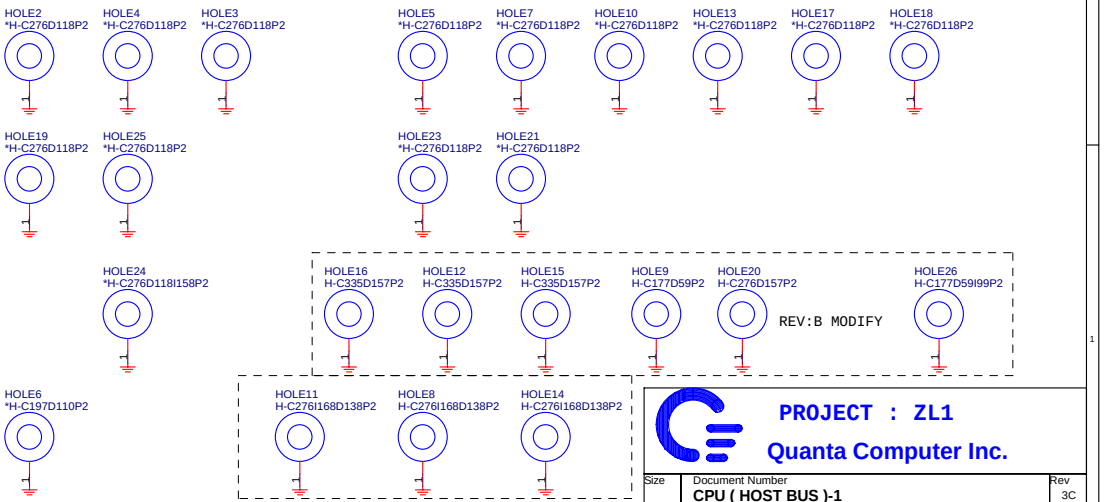

PROJECT : ZL1

Quanta Computer Inc.

Size	Document Number	Rev
	CPU (HOST BUS)-1	3C

Date: Monday, August 23, 2004 Sheet 2 of 34

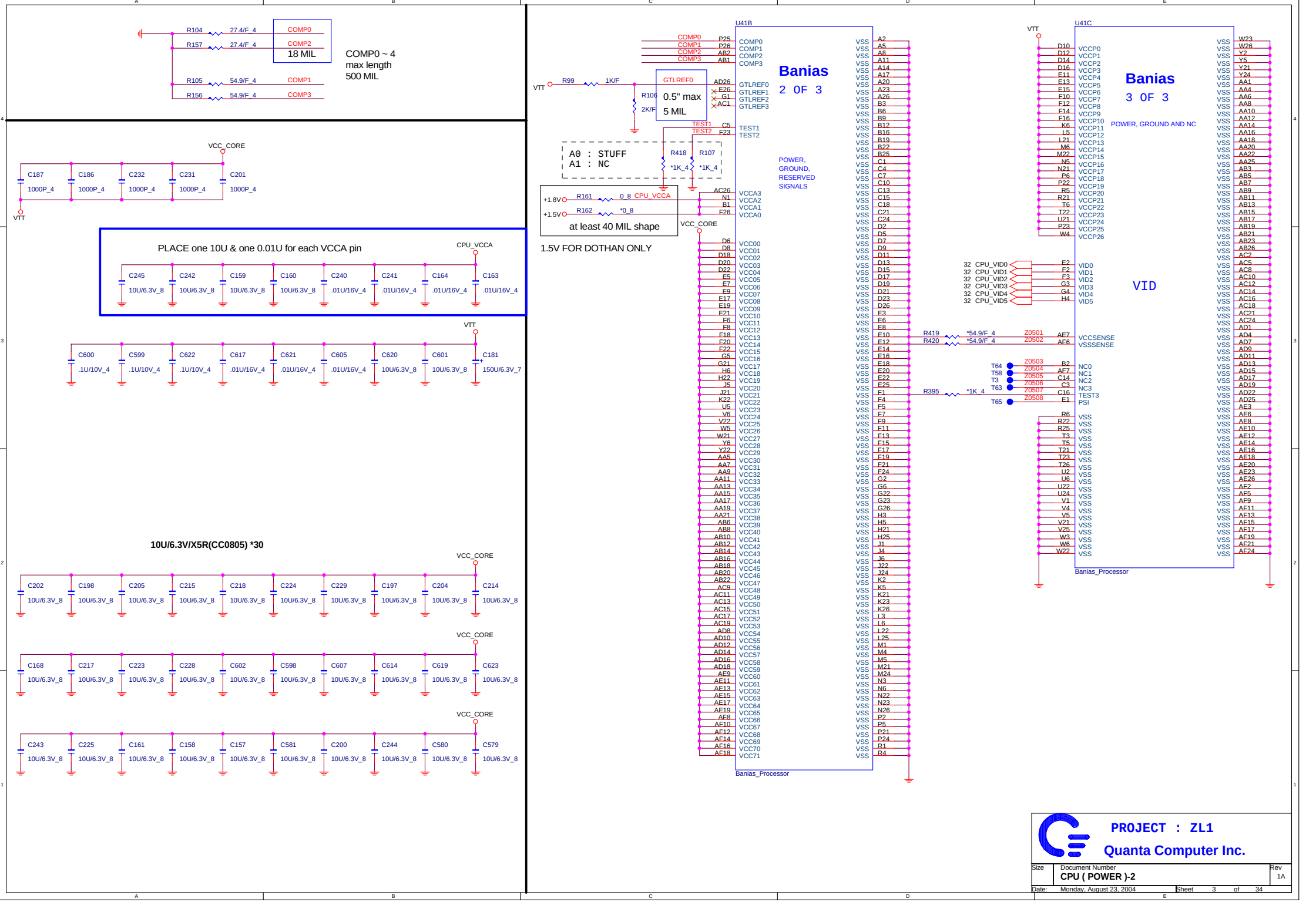
R104 27.4/F_4 COMP0
R157 27.4/F_4 COMP2
18 MIL
COMP0 ~ 4
max length
500 MIL
R105 54.9/F_4 COMP1
R156 54.9/F_4 COMP3
VCC_CORE
C187 1000P_4
C186 1000P_4
C232 1000P_4
C231 1000P_4
C201 1000P_4
VTT
PLACE one 10U & one 0.01U for each VCCA pin
CPU_VCCA
C245 10U/6.3V_8
C242 10U/6.3V_8
C159 10U/6.3V_8
C160 10U/6.3V_8
C240 .01U/16V_4
C241 .01U/16V_4
C164 .01U/16V_4
C163 .01U/16V_4
VTT
C600 .1U/10V_4
C599 .1U/10V_4
C622 .1U/10V_4
C617 .01U/16V_4
C621 .01U/16V_4
C605 .01U/16V_4
C620 10U/6.3V_8
C601 10U/6.3V_8
C181 150U/6.3V_7
10U/6.3V/X5R(CC0805) *30
VCC_CORE
C202 10U/6.3V_8
C198 10U/6.3V_8
C205 10U/6.3V_8
C215 10U/6.3V_8
C218 10U/6.3V_8
C224 10U/6.3V_8
C229 10U/6.3V_8
C197 10U/6.3V_8
C204 10U/6.3V_8
C214 10U/6.3V_8
VCC_CORE
C168 10U/6.3V_8
C217 10U/6.3V_8
C223 10U/6.3V_8
C228 10U/6.3V_8
C602 10U/6.3V_8
C598 10U/6.3V_8
C607 10U/6.3V_8
C614 10U/6.3V_8
C619 10U/6.3V_8
C623 10U/6.3V_8
VCC_CORE
C243 10U/6.3V_8
C225 10U/6.3V_8
C161 10U/6.3V_8
C158 10U/6.3V_8
C157 10U/6.3V_8
C581 10U/6.3V_8
C200 10U/6.3V_8
C244 10U/6.3V_8
C580 10U/6.3V_8
C579 10U/6.3V_8
U41B
Banias
2 OF 3
COMP0 P25
COMP1 P26
COMP2 AB2
COMP3 AB1
VTT R99 1K/F
R106 2K/F
GTLREF0
0.5" max
5 MIL
AD26 GTLREF0
E26 GTLREF1
G1 GTLREF2
AC1 GTLREF3
TEST1 C5 TEST1
TEST2 F23 TEST2
A0 : STUFF
A1 : NC
R418 *1K_4
R107 *1K_4
POWER,
GROUND,
RESERVED
SIGNALS
+1.8V R161 0_8 CPU_VCCA
+1.5V R162 *0_8
at least 40 MIL shape
1.5V FOR DOTHAN ONLY
AC26 VCCA3
N1 VCCA2
B1 VCCA1
F26 VCCA0
VCC_CORE
Banias_Processor
U41C
Banias
3 OF 3
POWER, GROUND AND NC
VID
VTT
32 CPU_VID0 E2 VID0
32 CPU_VID1 F2 VID1
32 CPU_VID2 F3 VID2
32 CPU_VID3 G3 VID3
32 CPU_VID4 G4 VID4
32 CPU_VID5 H4 VID5
R419 *54.9/F_4 Z0501 AF7 VCCSENSE
R420 *54.9/F_4 Z0502 AF6 VSSSENSE
T64 Z0503 B2 NC0
T58 Z0504 AF7 NC1
T3 Z0505 C14 NC2
T63 Z0506 C3 NC3
Z0507 C16 TEST3
R395 *1K_4
T65 Z0508 E1 PSI
Banias_Processor
PROJECT : ZL1
Quanta Computer Inc.
Size
Document Number
CPU (POWER)-2
Rev
1A
Date: Monday, August 23, 2004
Sheet 3 of 34

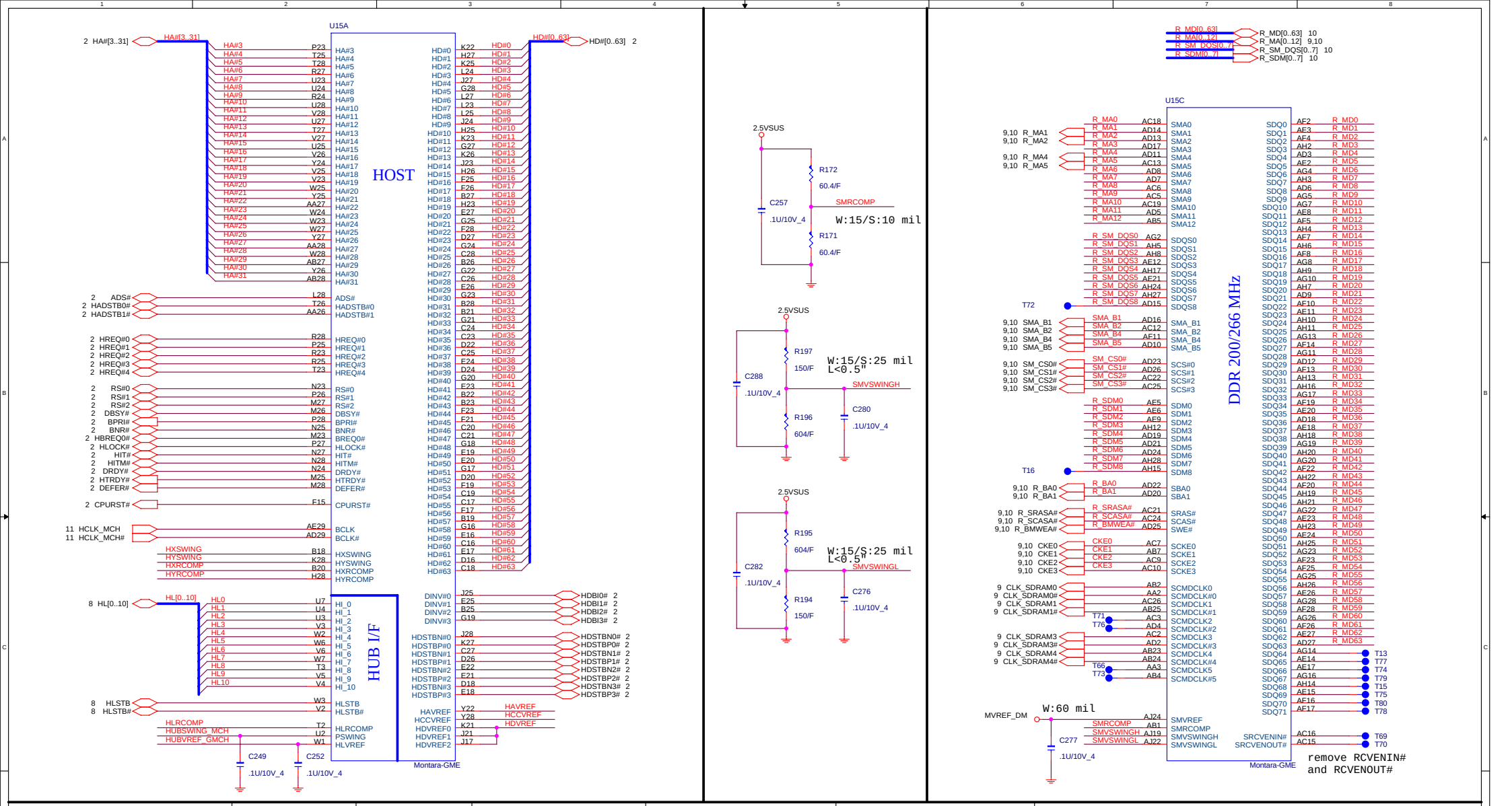

PROJECT : ZL1

Quanta Computer Inc.

Size	Document Number	Rev
	GMCH_A (HOST & DDR)	1A

Date: Monday, August 23, 2004 Sheet 4 of 34

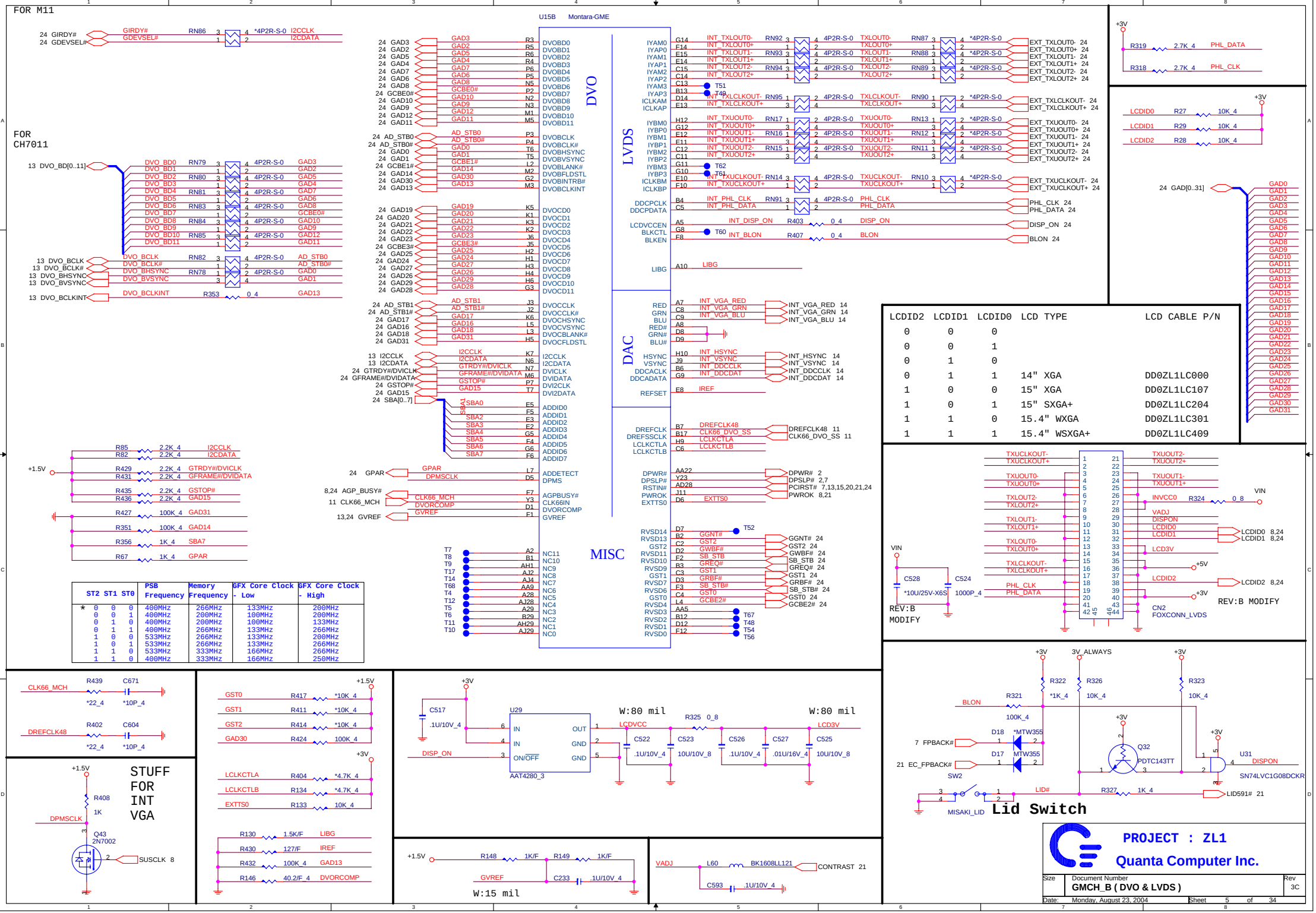
FOR M11
FOR CH7011
U15B Montara-GME
DVO
LVDS
DAC
MISC
LCDID2 LCDID1 LCDID0 LCD TYPE LCD CABLE P/N
0 0 0
0 0 1
0 1 0
0 1 1 14" XGA DD0ZL1LC000
1 0 0 15" XGA DD0ZL1LC107
1 0 1 15" SXGA+ DD0ZL1LC204
1 1 0 15.4" WXGA DD0ZL1LC301
1 1 1 15.4" WSXGA+ DD0ZL1LC409
ST2 ST1 ST0 PSB Frequency Memory Frequency GFX Core Clock - Low GFX Core Clock - High
* 0 0 0 400MHz 266MHz 133MHz 200MHz
0 0 1 400MHz 200MHz 100MHz 200MHz
0 1 0 400MHz 200MHz 100MHz 133MHz
0 1 1 400MHz 266MHz 133MHz 266MHz
1 0 0 533MHz 266MHz 133MHz 200MHz
1 0 1 533MHz 266MHz 133MHz 266MHz
1 1 0 533MHz 333MHz 166MHz 266MHz
1 1 1 400MHz 333MHz 166MHz 250MHz
STUFF FOR INT VGA
Lid Switch
REV:B MODIFY
REV:B MODIFY
PROJECT : ZL1
Quanta Computer Inc.
Document Number
GMCH_B (DVO & LVDS)
Rev 3C
Date: Monday, August 23, 2004
Sheet 5 of 34

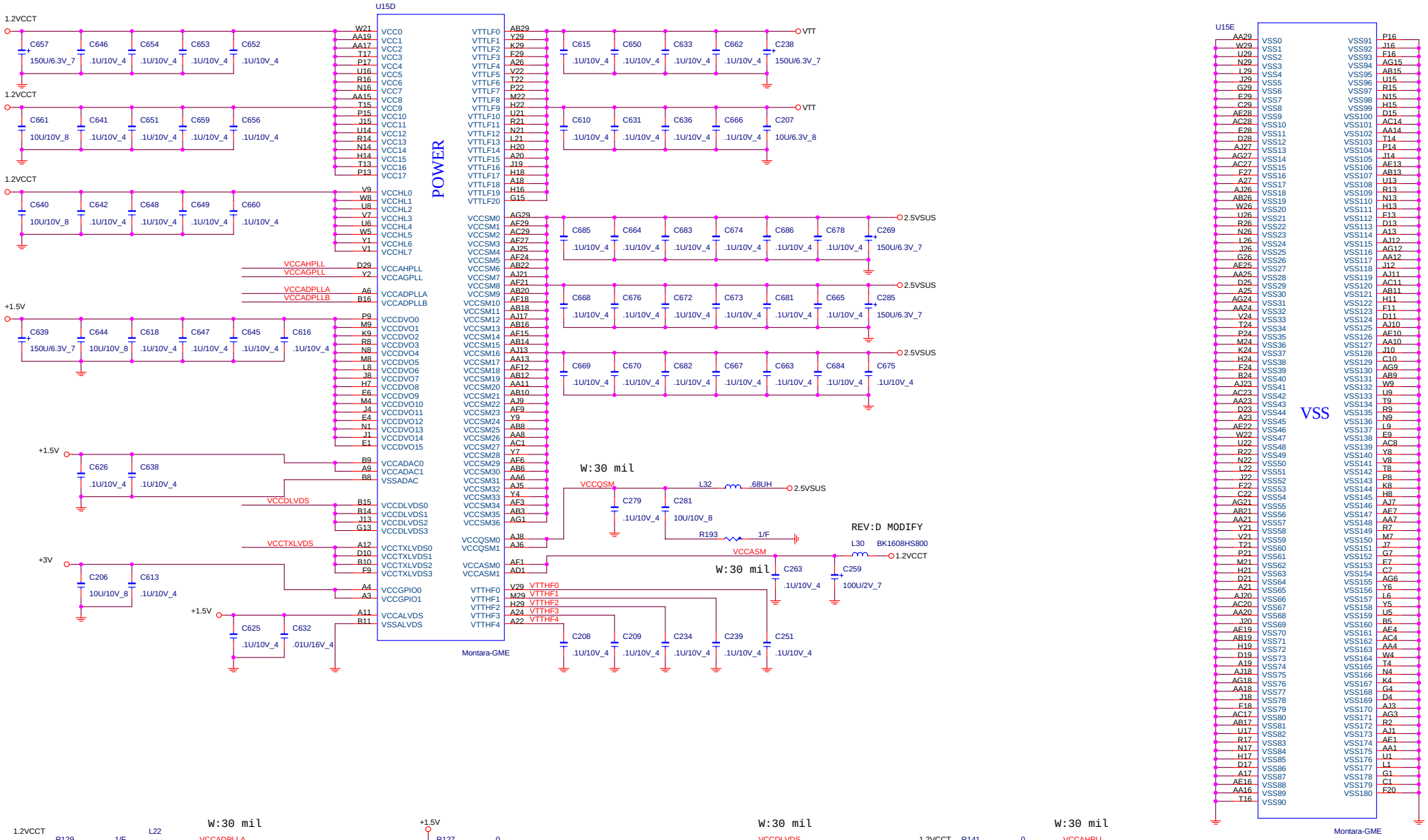

PROJECT : ZL1

Quanta Computer Inc.

Size	Document Number	Rev
	GMCH_C (POWER)	3B

Date: Monday, August 23, 2004 Sheet 6 of 34

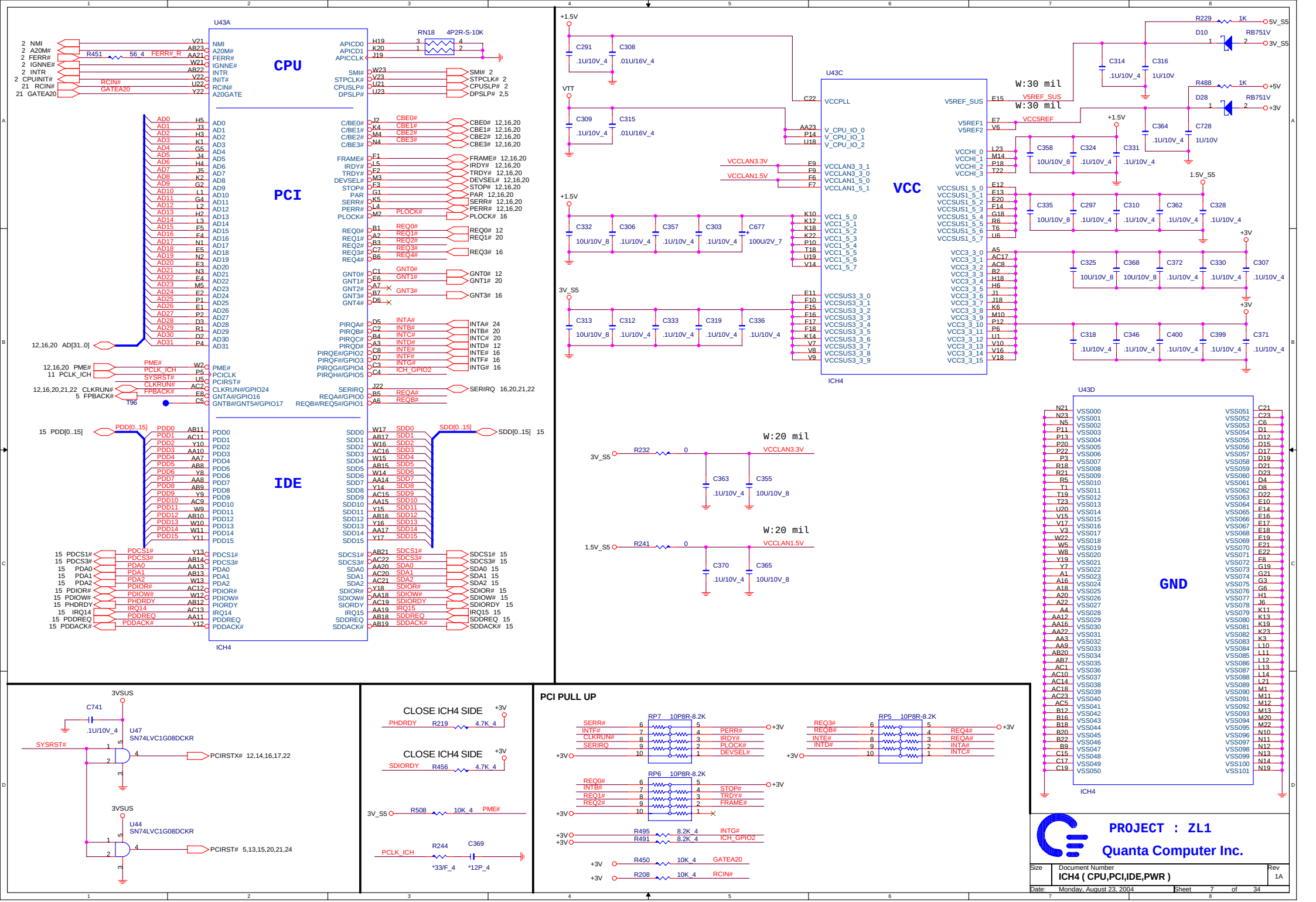
CPU
PCI
IDE
U43A
ICH4
U43C
VCC
U43D
GND
W:30 mil
W:20 mil
PROJECT : ZL1
Quanta Computer Inc.
Document Number
ICH4 (CPU,PCI,IDE,PWR)
Rev
1A
Date: Monday, August 23, 2004
Sheet 7 of 34
PCI PULL UP
CLOSE ICH4 SIDE
U47
SN74LVC1G08DCKR
U44
SN74LVC1G08DCKR

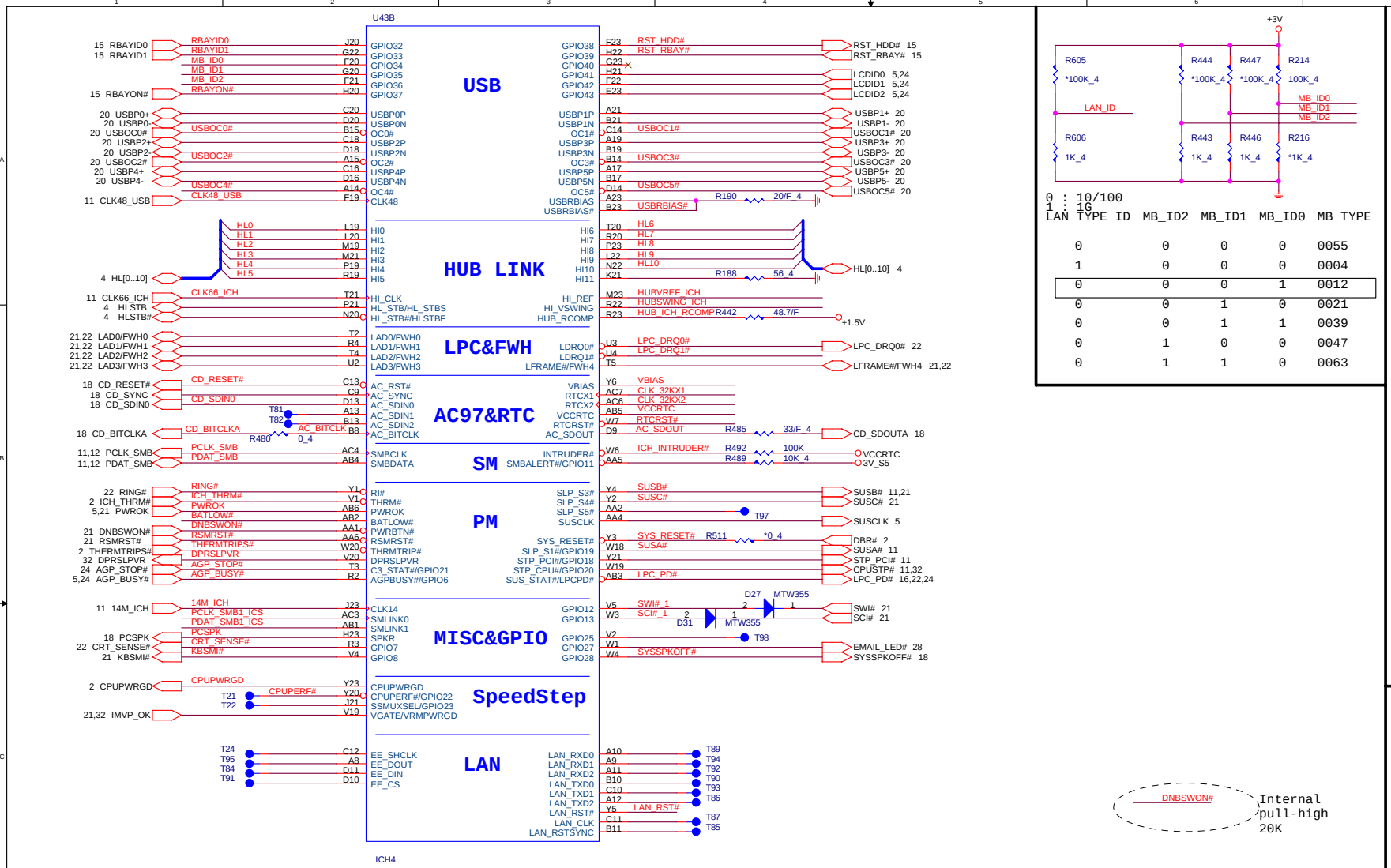

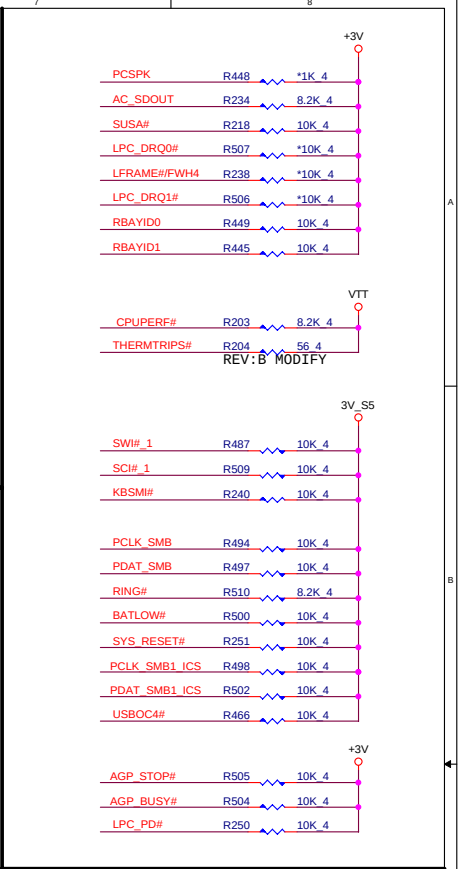

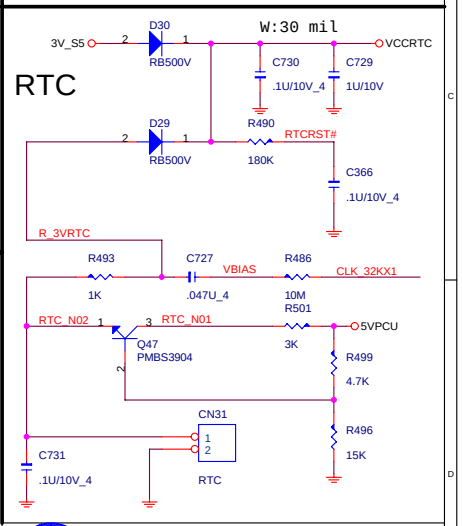

DNBSWON#

Internal pull-high 20K

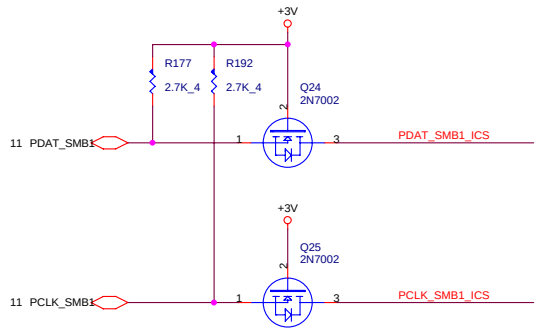

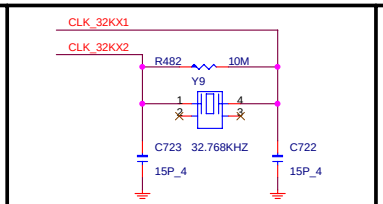

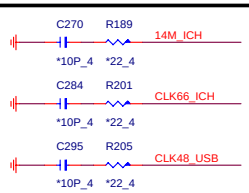

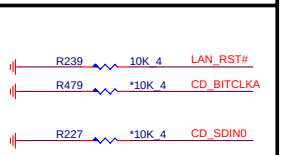

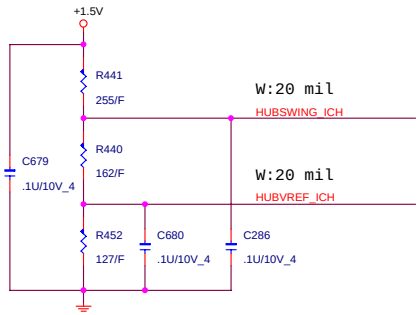

PROJECT : ZL1

Quanta Computer Inc.

Size	Document Number	Rev
	ICH4 (USB,HUB,LPC)	2A

Date: Monday, August 23, 2004 Sheet 8 of 34

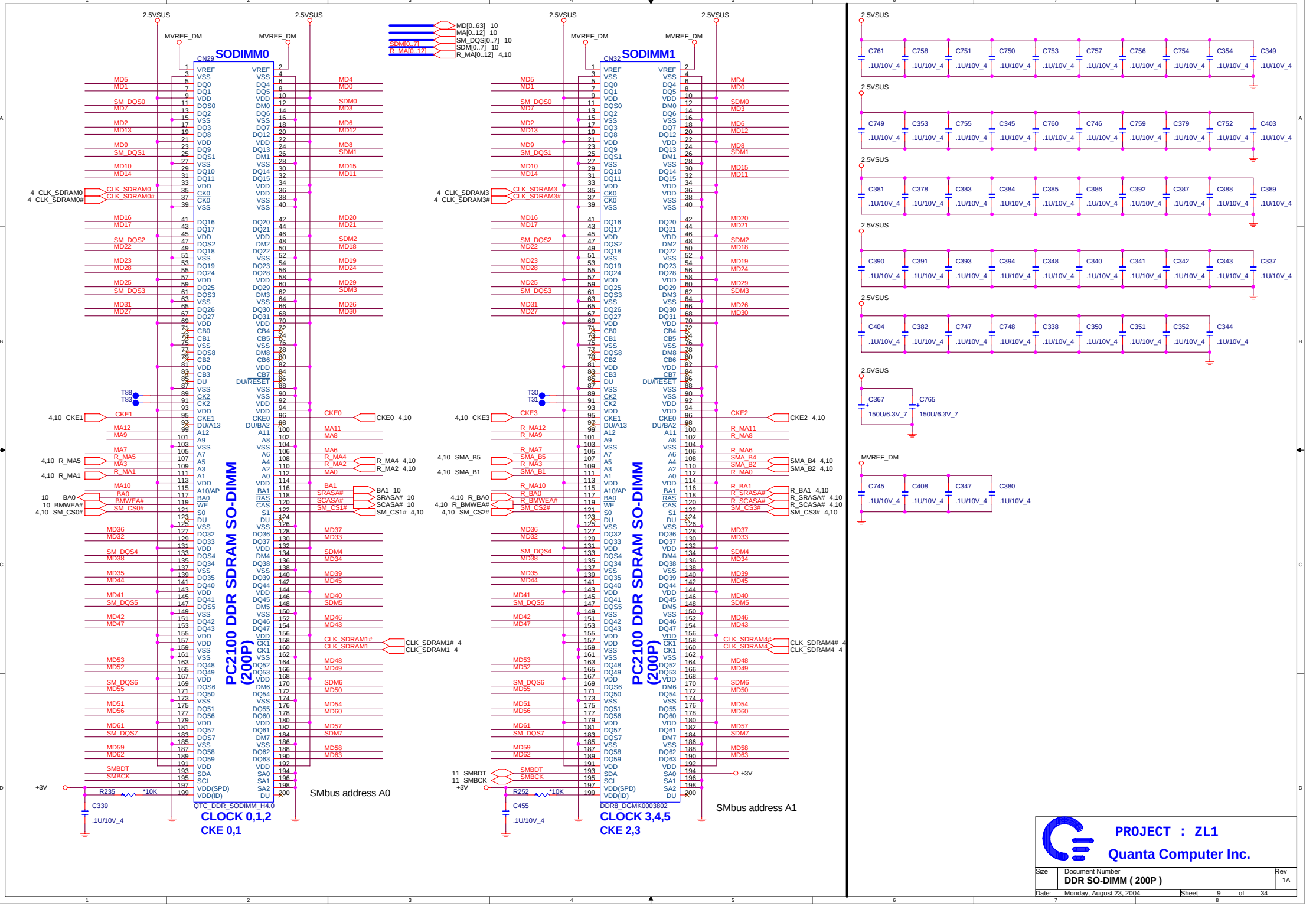
SODIMM0
CN29
SODIMM1
CN32
PC2100 DDR SDRAM SO-DIMM (200P)
QTC_DDR_SODIMM_H4.0
DDR8_DGMK0003802
2.5VSUS
MVREF_DM
MD[0..63] 10
MA[0..12] 10
SM_DQS[0..7] 10
SDM[0..7] 10
R_MA[0..12] 4,10
SDM[0..7]
R_MA[0..12]
CLOCK 0,1,2
CKE 0,1
CLOCK 3,4,5
CKE 2,3
SMbus address A0
SMbus address A1
PROJECT : ZL1
Quanta Computer Inc.
Size
Document Number
DDR SO-DIMM (200P)
Rev
1A
Date: Monday, August 23, 2004
Sheet 9 of 34

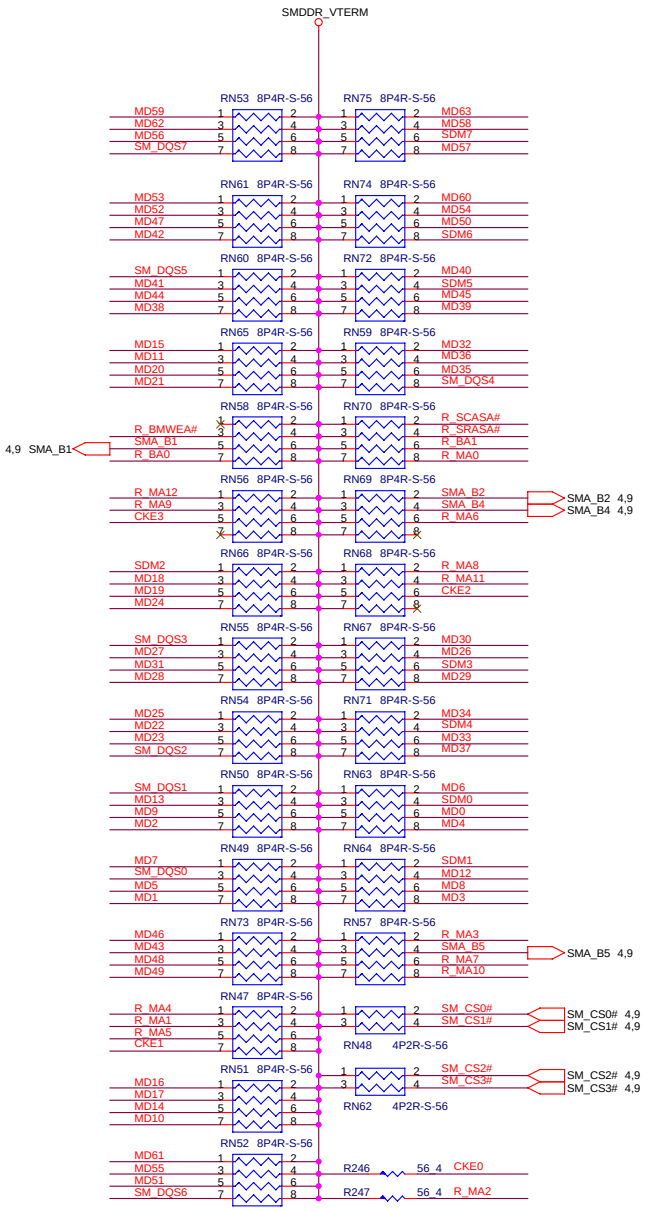

For terminal R-pack.

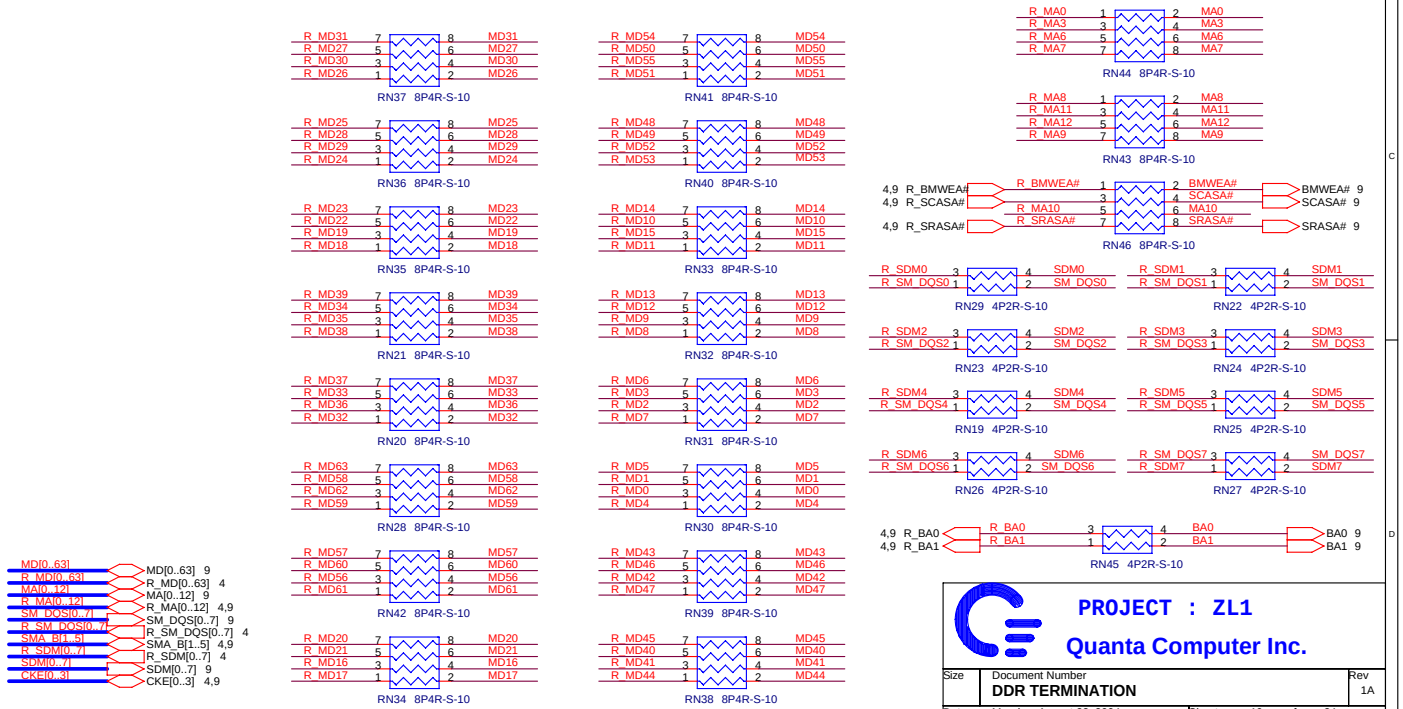

PROJECT : ZL1

Quanta Computer Inc.

Size	Document Number	Rev
	DDR TERMINATION	1A

Date: Monday, August 23, 2004 Sheet 10 of 34

S2	S1	S0	CPU	3V66[0..4]	3V66_5/66IN
1	0	0	66	66IN	66 Input
1	0	1	100	66IN	66 Input
1	1	0	200	66IN	66 Input
1	1	1	133	66IN	66 Input
0	0	0	66	66	66
0	0	1	100	66	66
0	1	0	200	66	66
0	1	1	133	66	66

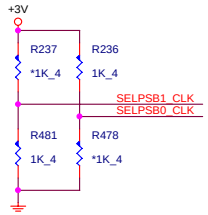

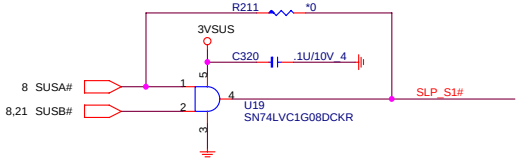

SMBus Byte 0 , Bit 5 = 0 3V66_1/VCH 66 MHz W S/S
SMBus Byte 0 , Bit 5 = 1 48 MHz W/O S/S

Byte 0 , Bit 7 = 0 Disable Spread Spectrum

Byte 0 , Bit 7 = 1 Enable Spread Spectrum

Byte 4 Bit 7	Byte 5 Bit 7	Byte 5 Bit 6	Spread Mode	Spread %
SS2	SS1	SS0		
0	0	0	DOWN	+0.00 , -0.25
0	0	1	DOWN	+0.00 , -0.50
0	1	0	DOWN	+0.00 , -0.75
0	1	1	DOWN	+0.00 , -1.00
1	0	0	CENTER	+0.13 , -0.13
1	0	1	CENTER	+0.25 , -0.25
1	1	0	CENTER	+0.37 , -0.37
1	1	1	CENTER	+0.50 , -1.50

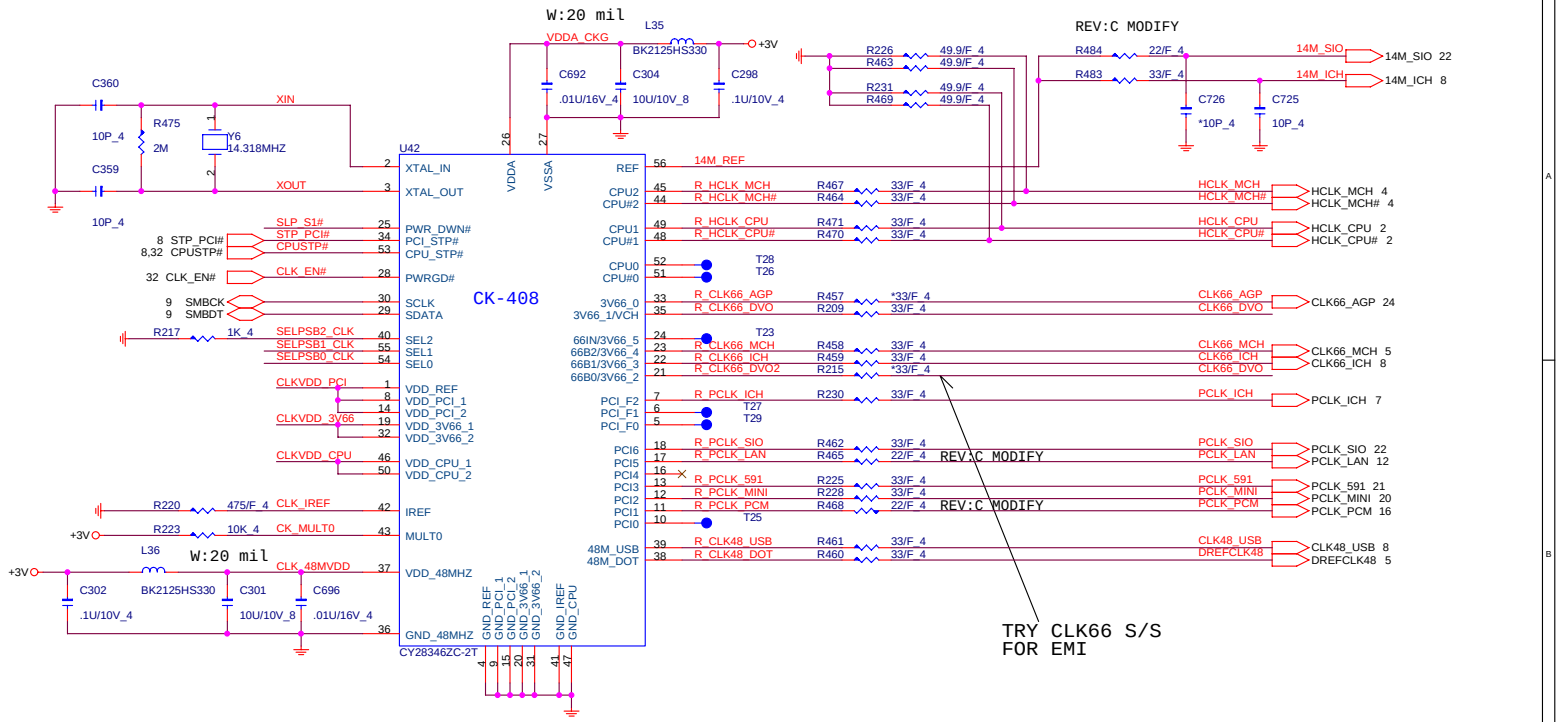

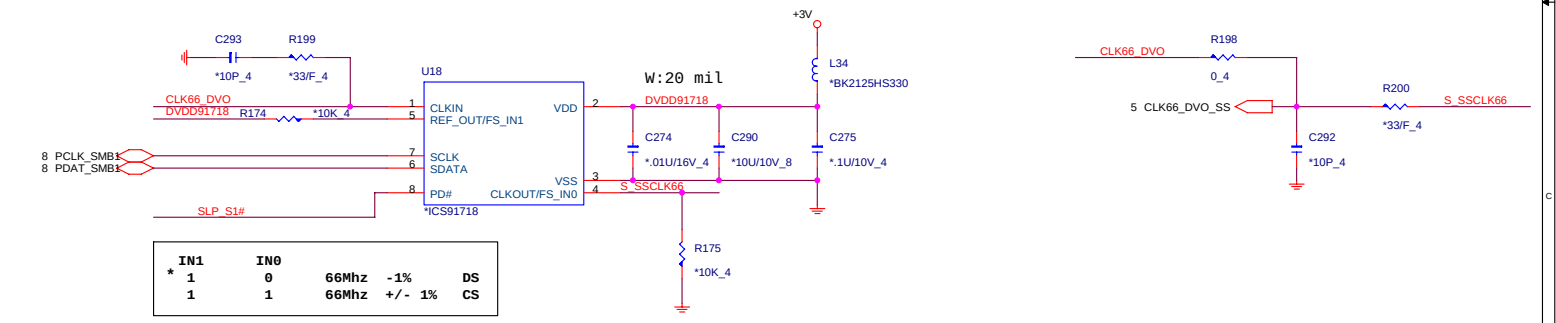

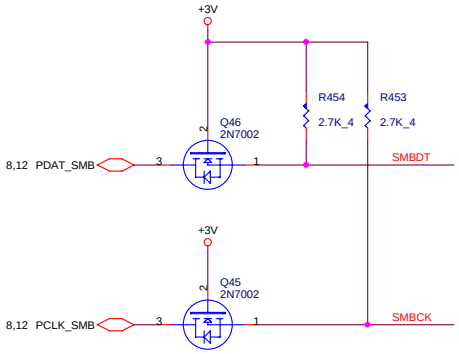

These are for backdrive issue

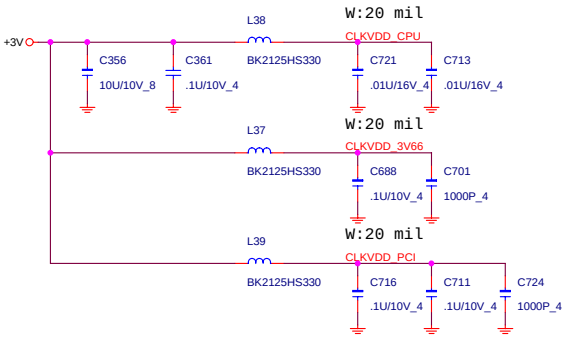

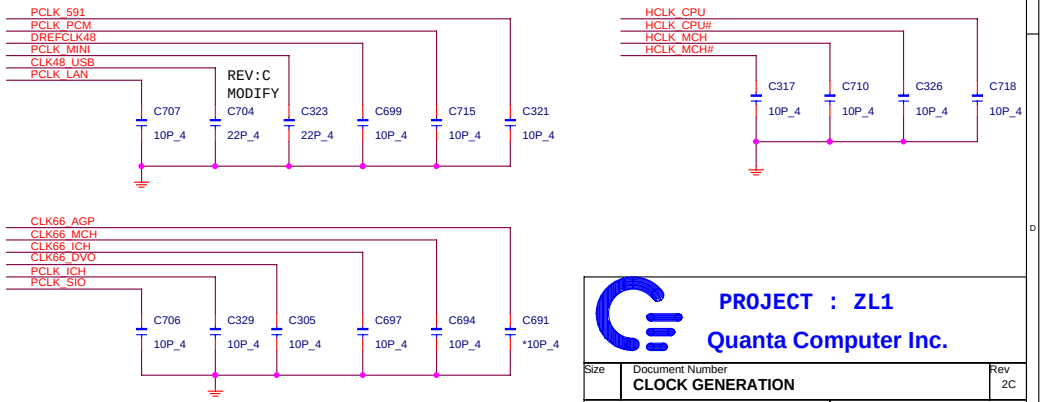

PROJECT : ZL1

Quanta Computer Inc.

Size	Document Number	Rev
	CLOCK GENERATION	2C

Date: Monday, August 23, 2004 Sheet 11 of 34

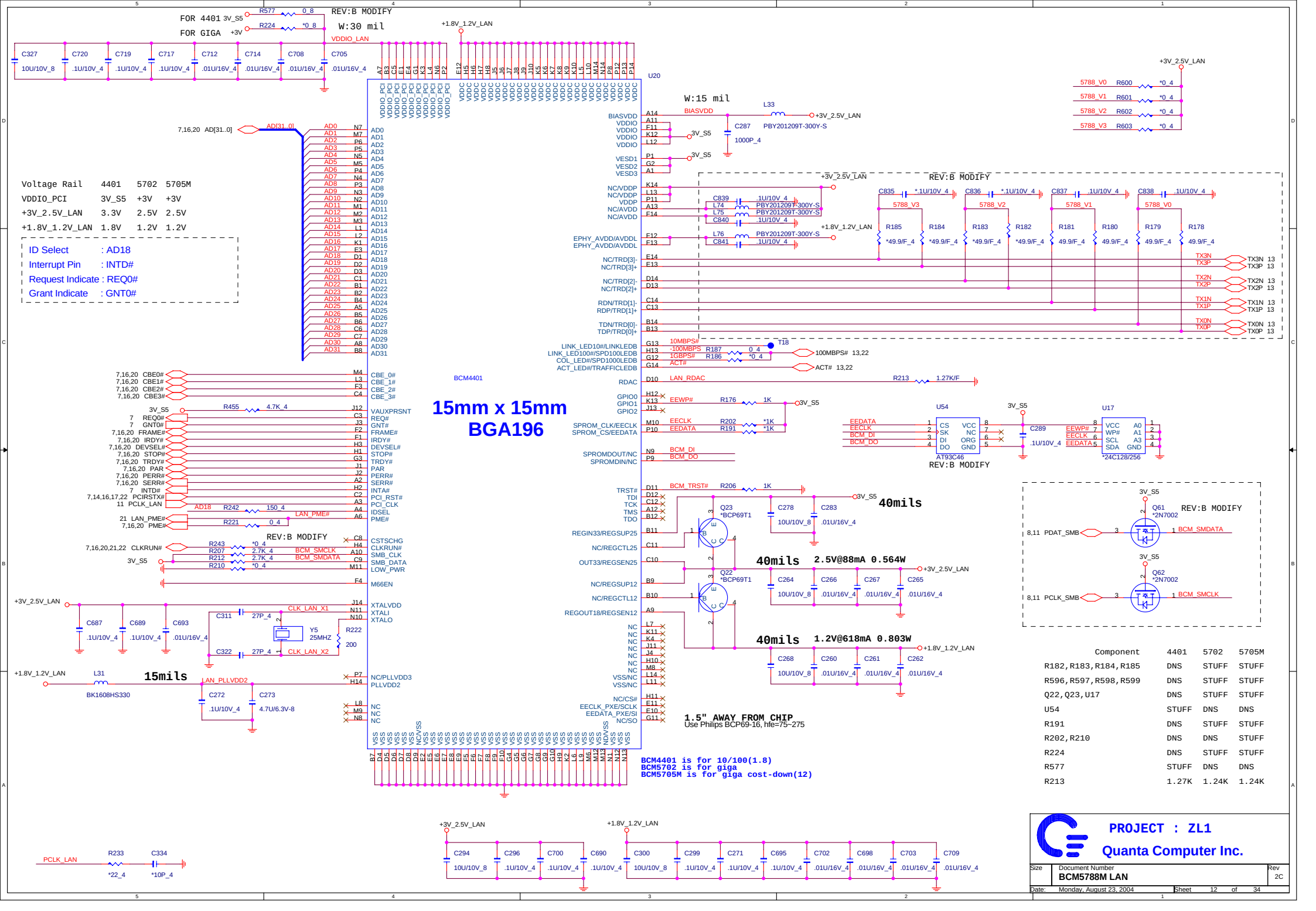

Component	4401	5702	5705M
R182,R183,R184,R185	DNS	STUFF	STUFF
R596,R597,R598,R599	DNS	STUFF	STUFF
Q22,Q23,U17	DNS	STUFF	STUFF
U54	STUFF	DNS	DNS
R191	DNS	STUFF	STUFF
R202,R210	DNS	DNS	STUFF
R224	DNS	STUFF	STUFF
R577	STUFF	DNS	DNS
R213	1.27K	1.24K	1.24K

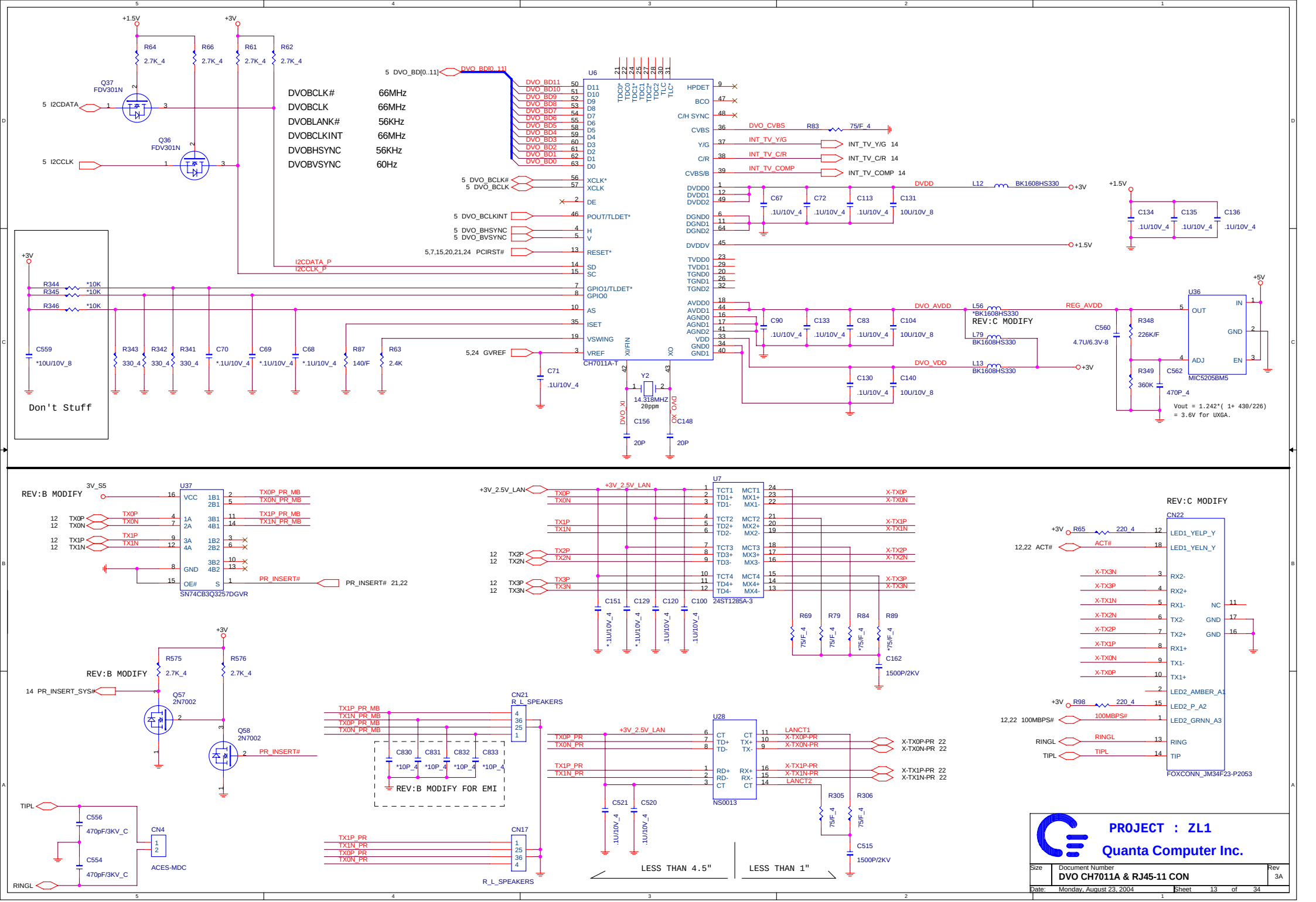
DVOBCLK# 66MHz
DVOBCLK 66MHz
DVOBLANK# 56KHz
DVOBCLKINT 66MHz
DVOBHSYNC 56KHz
DVOBVSYNC 60Hz
U6
CH7011A-T
Y2
14.318MHZ 20ppm
Don't Stuff
U36
MIC5205BM5
Vout = 1.242*(1+ 430/226)
= 3.6V for UXGA.
REV:C MODIFY
REV:B MODIFY
U37
SN74CB3Q3257DGVR
U7
24ST1285A-3
CN22
FOXCONN_JM34F23-P2053
Q57 2N7002
Q58 2N7002
CN21 R_L_SPEAKERS
CN17 R_L_SPEAKERS
REV:B MODIFY FOR EMI
U28
NS0013
LESS THAN 4.5"
LESS THAN 1"
CN4
ACES-MDC
PROJECT : ZL1
Quanta Computer Inc.
Document Number
DVO CH7011A & RJ45-11 CON
Rev 3A
Date: Monday, August 23, 2004
Sheet 13 of 34

SEL	FUNCTION
LOW	IN_B0
HIGH	IN_B1

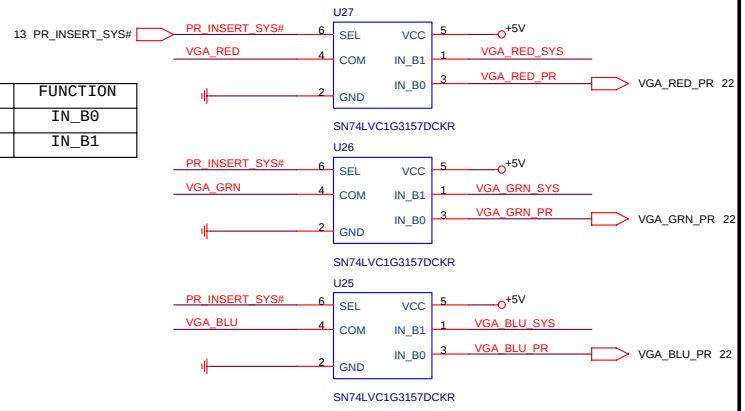

CRT PORT

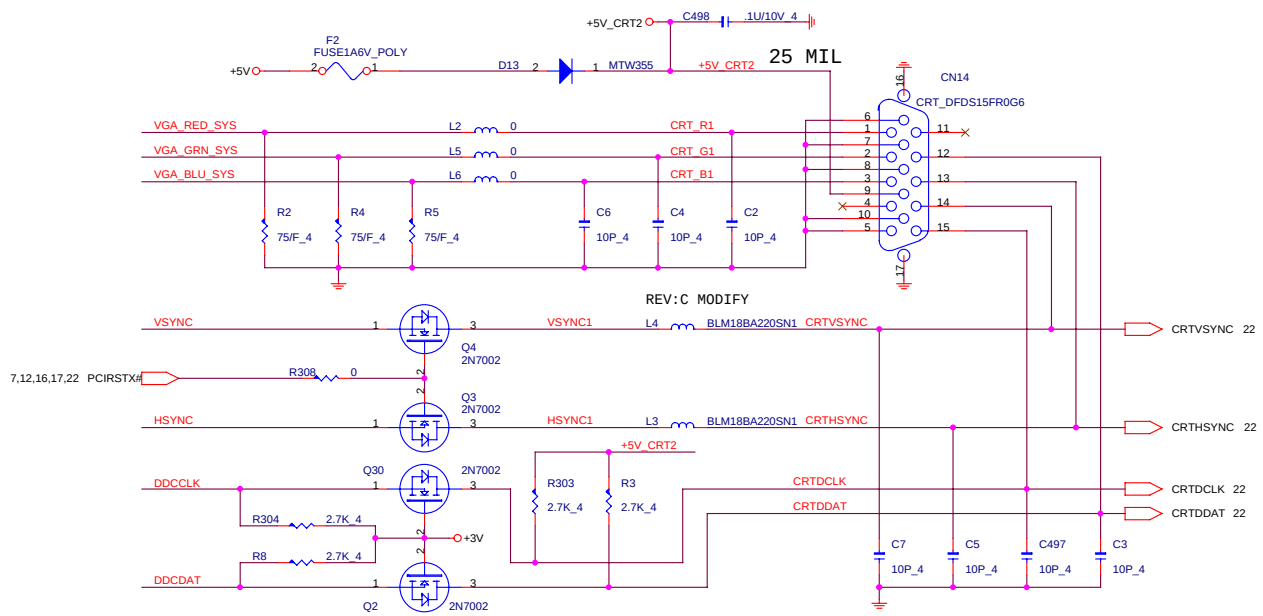

REV:C MODIFY

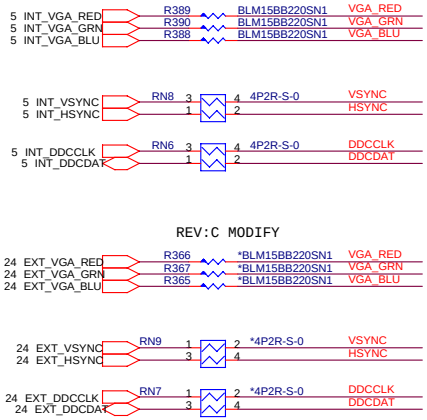

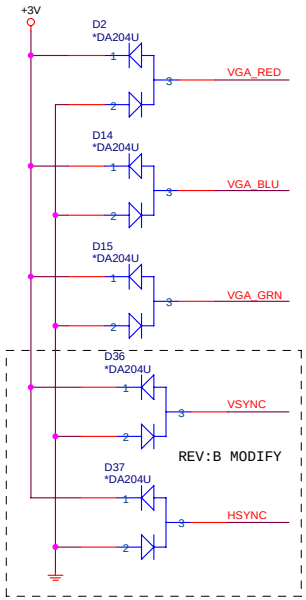

S-VIDEO

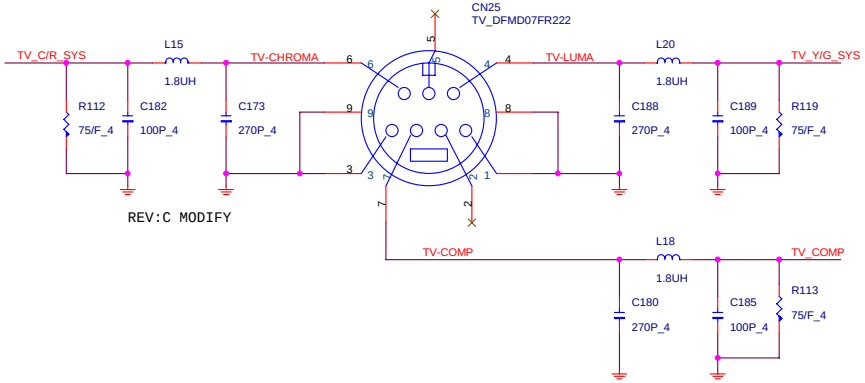

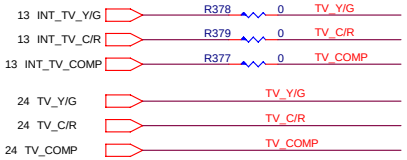

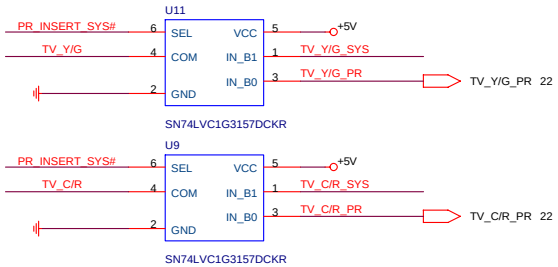

PROJECT : ZL1

Quanta Computer Inc.

Size	Document Number	Rev
	CRT & S-VIDEO	2C

Date: Monday, August 23, 2004 Sheet 14 of 34

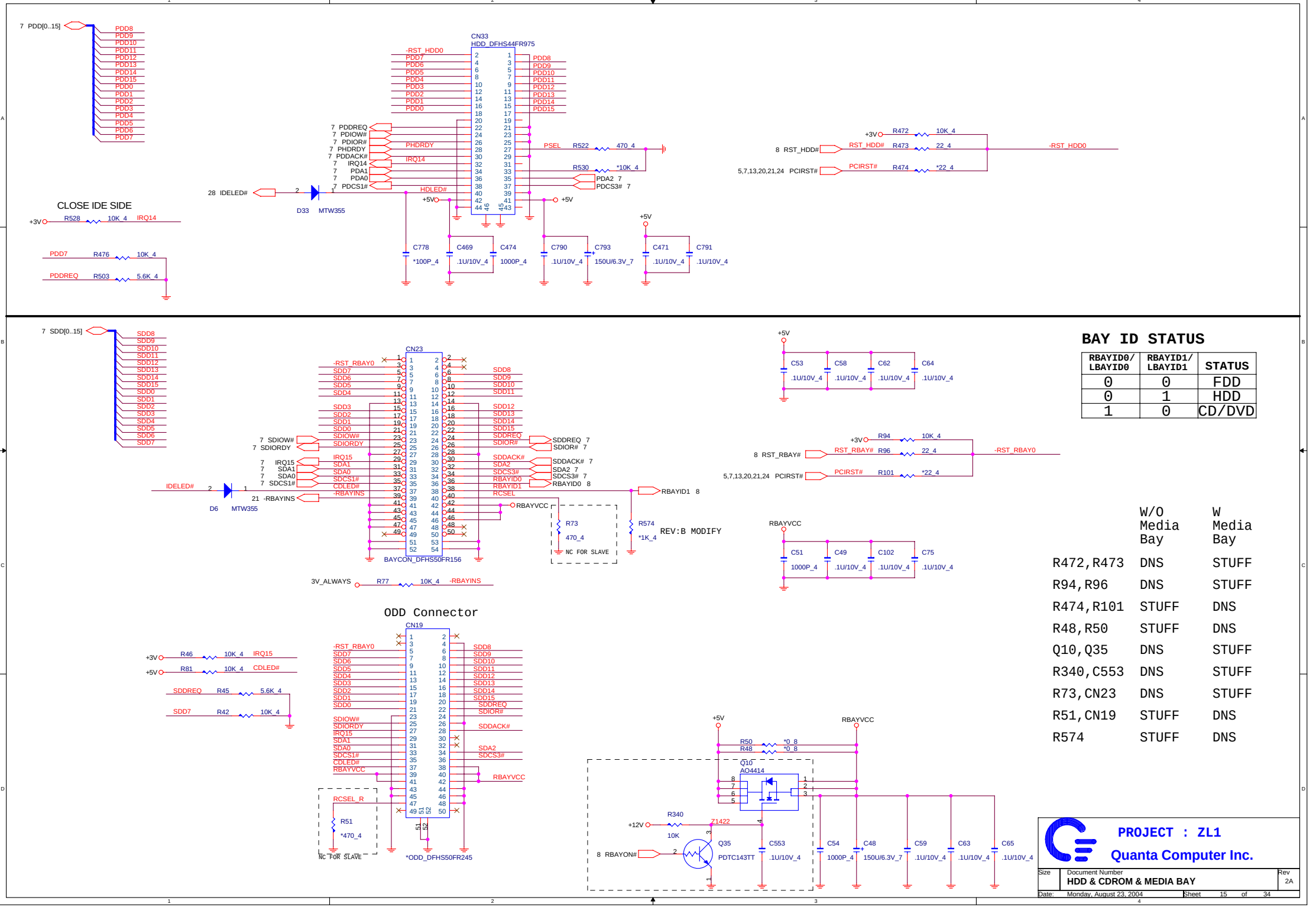

BAY ID STATUS

RBAYID0/ LBAYID0	RBAYID1/ LBAYID1	STATUS
0	0	FDD
0	1	HDD
1	0	CD/DVD

	W/O Media Bay	W Media Bay
R472,R473	DNS	STUFF
R94,R96	DNS	STUFF
R474,R101	STUFF	DNS
R48,R50	STUFF	DNS
Q10,Q35	DNS	STUFF
R340,C553	DNS	STUFF
R73,CN23	DNS	STUFF
R51,CN19	STUFF	DNS
R574	STUFF	DNS

PROJECT : ZL1

Quanta Computer Inc.

Size	Document Number	Rev
	HDD & CDROM & MEDIA BAY	2A

Date: Monday, August 23, 2004 Sheet 15 of 34

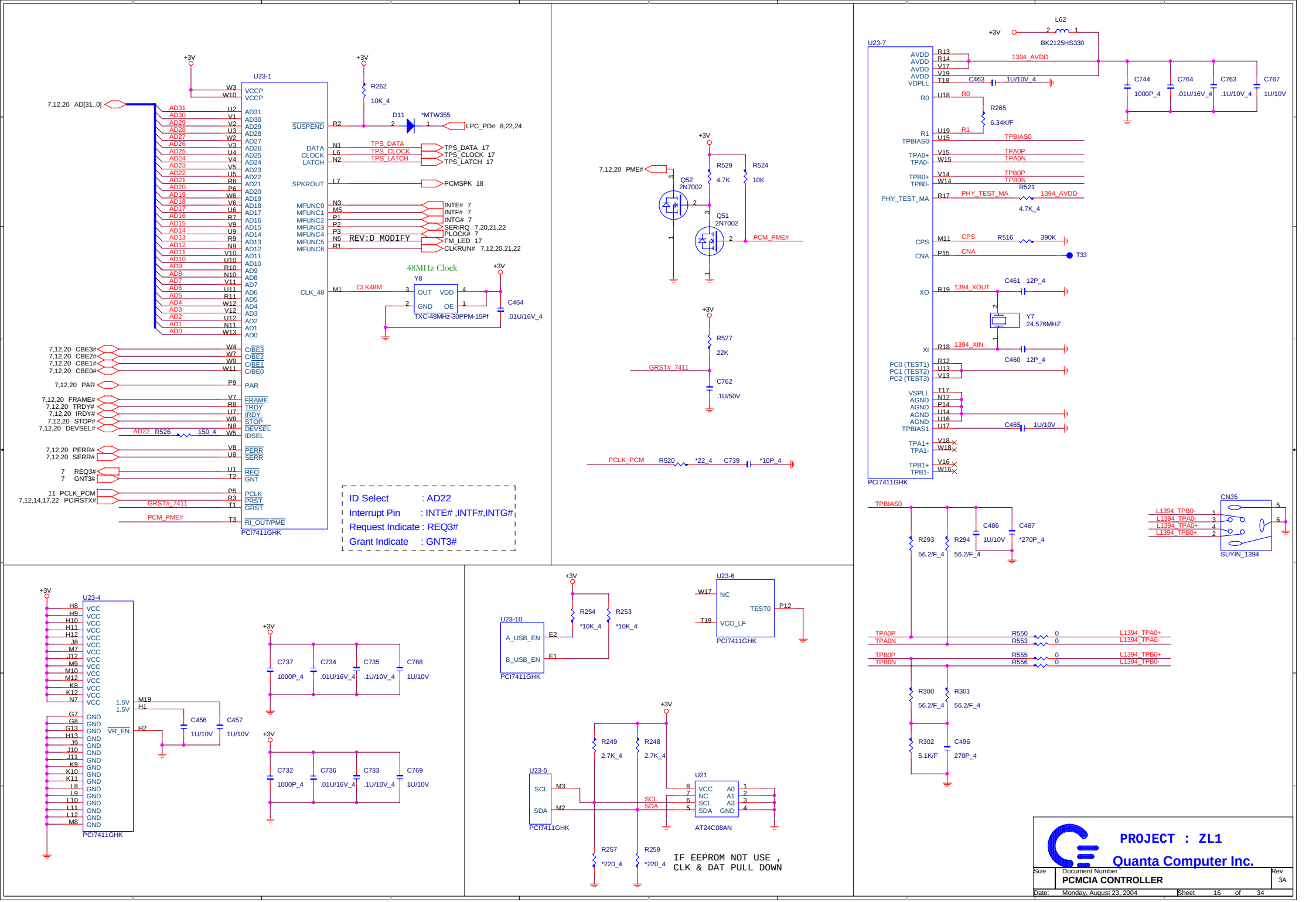
U23-1
PCI7411GHK
7,12,20 AD[31..0]
SUSPEND
DATA
CLOCK
LATCH
SPKROUT
MFUNC0
MFUNC1
MFUNC2
MFUNC3
MFUNC4
MFUNC5
MFUNC6
CLK_48
R262
10K_4
D11
*MTW355
LPC_PD# 8,22,24
TPS_DATA 17
TPS_CLOCK 17
TPS_LATCH 17
PCMSPK 18
INTE# 7
INTF# 7
INTG# 7
SERIRQ 7,20,21,22
PLOCK# 7
FM_LED 17
CLKRUN# 7,12,20,21,22
REV:D MODIFY
48MHz Clock
Y8
TXC-48MHz-30PPM-15Pf
C464
.01U/16V_4
7,12,20 CBE3#
7,12,20 CBE2#
7,12,20 CBE1#
7,12,20 CBE0#
7,12,20 PAR
7,12,20 FRAME#
7,12,20 TRDY#
7,12,20 IRDY#
7,12,20 STOP#
7,12,20 DEVSEL#
AD22 R526 150_4
7,12,20 PERR#
7,12,20 SERR#
7 REQ3#
7 GNT3#
11 PCLK_PCM
7,12,14,17,22 PCIRSTX#
GRST#_7411
PCM_PME#
ID Select : AD22
Interrupt Pin : INTE# ,INTF#,INTG#
Request Indicate : REQ3#
Grant Indicate : GNT3#
7,12,20 PME#
Q52 2N7002
Q51 2N7002
R529 4.7K
R524 10K
PCM_PME#
R527 22K
GRST#_7411
C762 .1U/50V
PCLK_PCM R520 *22_4 C739 *10P_4
L62 BK2125HS330
U23-7
PCI7411GHK
1394_AVDD
C463 .1U/10V_4
C744 1000P_4
C764 .01U/16V_4
C763 .1U/10V_4
C767 1U/10V
R265 6.34K/F
TPBIAS0
TPA0P
TPA0N
TPB0P
TPB0N
PHY_TEST_MA
R521 4.7K_4
CPS R516 390K
CNA
T33
C461 12P_4
XO 1394_XOUT
Y7 24.576MHZ
XI 1394_XIN
C460 12P_4
PC0 (TEST1)
PC1 (TEST2)
PC2 (TEST3)
VSPLL
AGND
TPBIAS1
C465 1U/10V
TPA1+
TPA1-
TPB1+
TPB1-
CN35
SUYIN_1394
L1394_TPB0-
L1394_TPA0-
L1394_TPA0+
L1394_TPB0+
R293 56.2/F_4
R294 56.2/F_4
C486 1U/10V
C487 *270P_4
R550 0
R553 0
R555 0
R556 0
R300 56.2/F_4
R301 56.2/F_4
R302 5.1K/F
C496 270P_4
U23-4
VR_EN
C456 1U/10V
C457 1U/10V
C737 1000P_4
C734 .01U/16V_4
C735 .1U/10V_4
C768 1U/10V
C732 1000P_4
C736 .01U/16V_4
C733 .1U/10V_4
C769 1U/10V
U23-10
A_USB_EN
B_USB_EN
R254 *10K_4
R253 *10K_4
U23-6
NC
TEST0
VCO_LF
P12
U23-5
SCL
SDA
R249 2.7K_4
R248 2.7K_4
U21
AT24C08AN
R257 *220_4
R259 *220_4
IF EEPROM NOT USE ,
CLK & DAT PULL DOWN
PROJECT : ZL1
Quanta Computer Inc.
Size
Document Number
PCMCIA CONTROLLER
Rev
3A
Date: Monday, August 23, 2004
Sheet 16 of 34

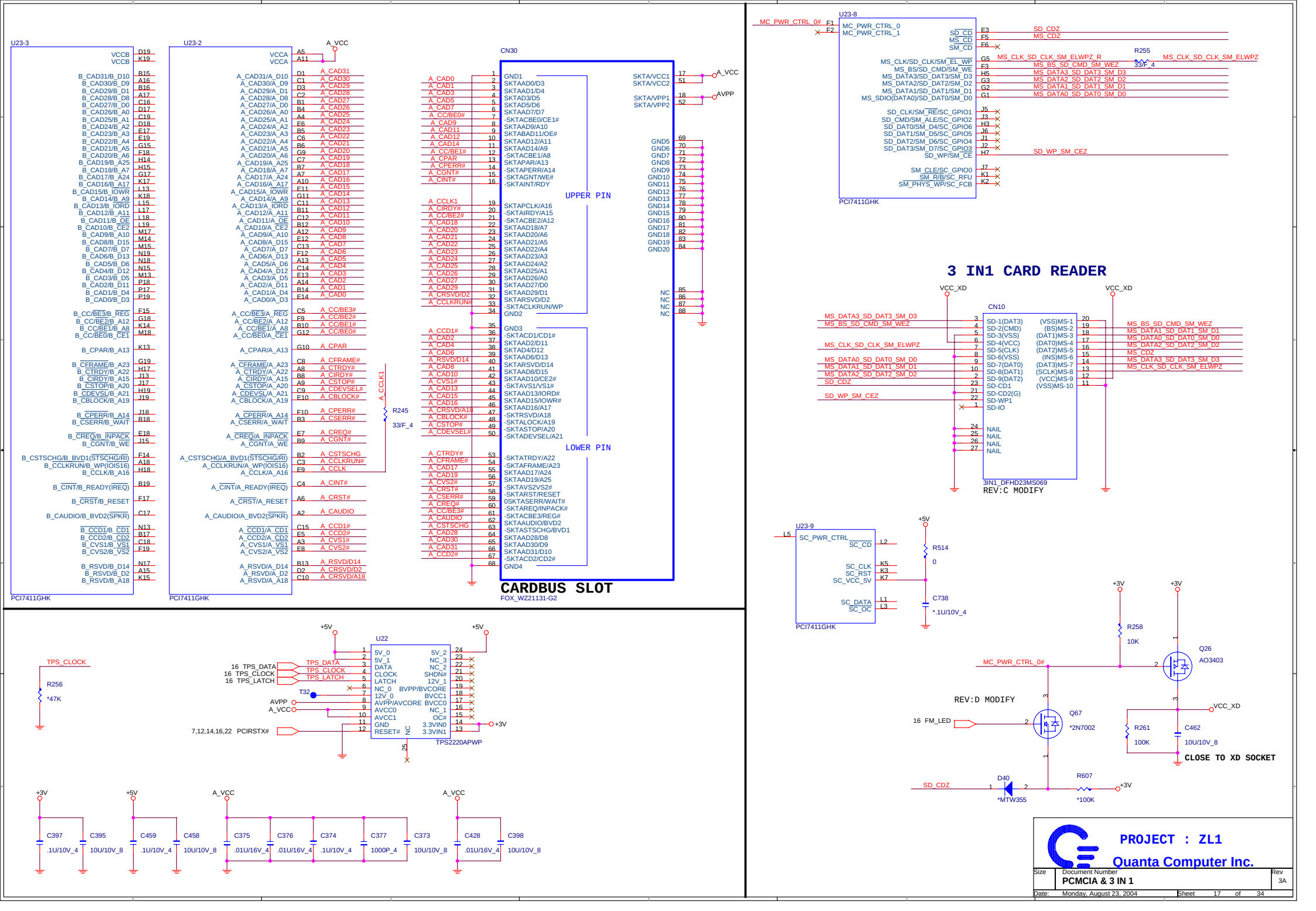
U23-3
PCI7411GHK
U23-2
PCI7411GHK
A_VCC
CN30
UPPER PIN
LOWER PIN
CARDBUS SLOT
FOX_WZ21131-G2
R245
33/F_4
U23-8
PCI7411GHK
R255
33/F_4
3 IN1 CARD READER
VCC_XD
CN10
3IN1_DFHD23MS069
REV:C MODIFY
U23-9
PCI7411GHK
R514
0
C738
*.1U/10V_4
R258
10K
Q26
AO3403
REV:D MODIFY
Q67
*2N7002
R261
100K
C462
10U/10V_8
CLOSE TO XD SOCKET
D40
*MTW355
R607
*100K
TPS_CLOCK
R256
*47K
U22
TPS2220APWP
+5V
+3V
AVPP
C397
.1U/10V_4
C395
10U/10V_8
C459
.1U/10V_4
C458
10U/10V_8
C375
.01U/16V_4
C376
.01U/16V_4
C374
.1U/10V_4
C377
1000P_4
C373
10U/10V_8
C428
.01U/16V_4
C398
10U/10V_8
PROJECT : ZL1
Quanta Computer Inc.
Size
Document Number
PCMCIA & 3 IN 1
Rev
3A
Date: Monday, August 23, 2004
Sheet 17 of 34

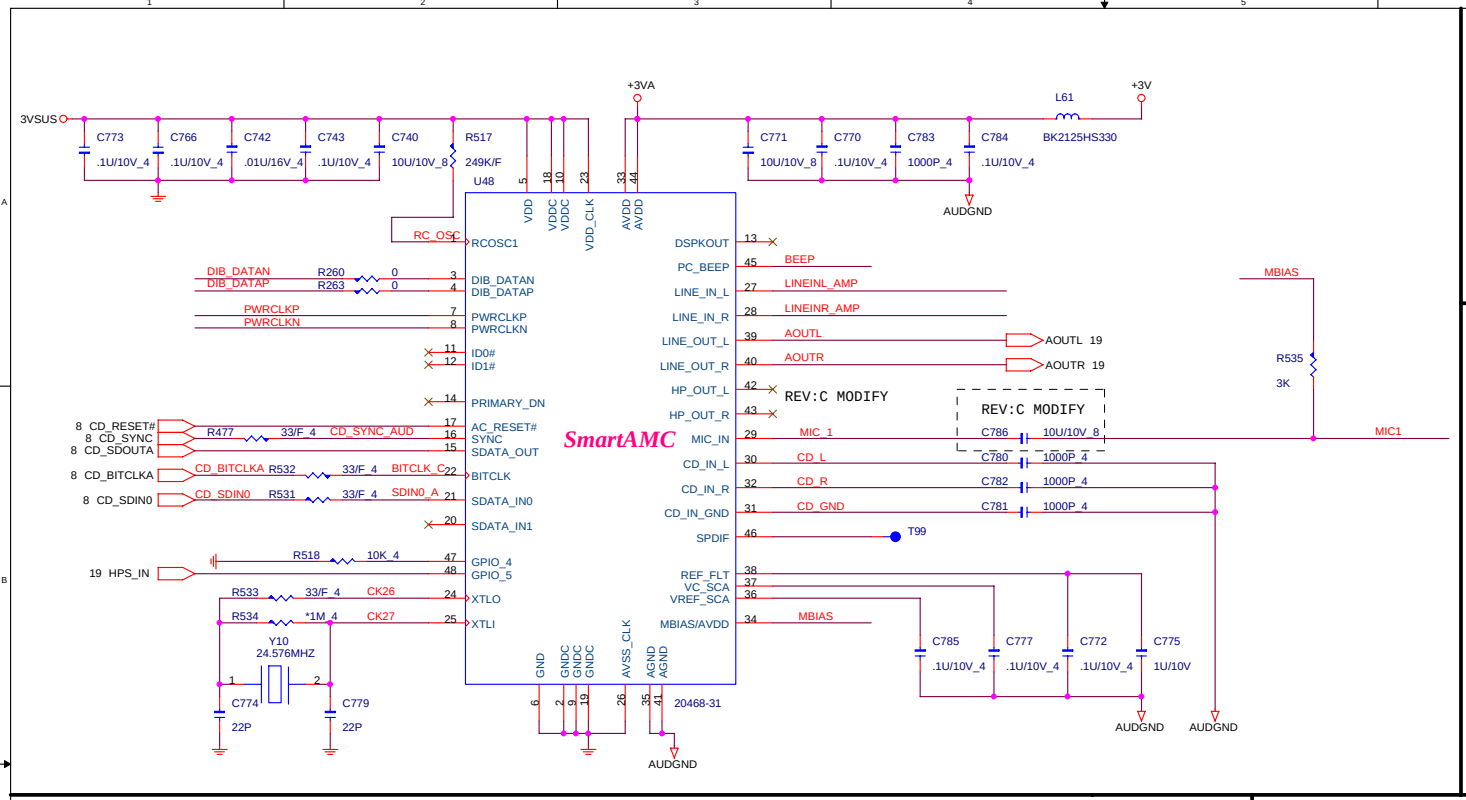

BEEP

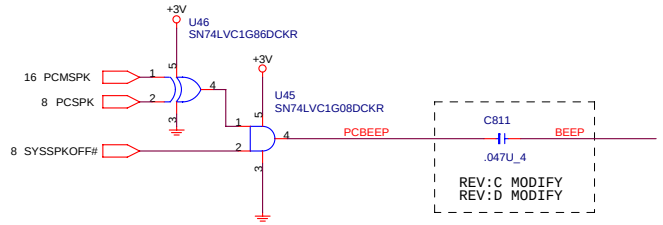

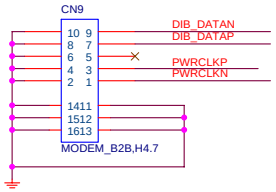

MIC

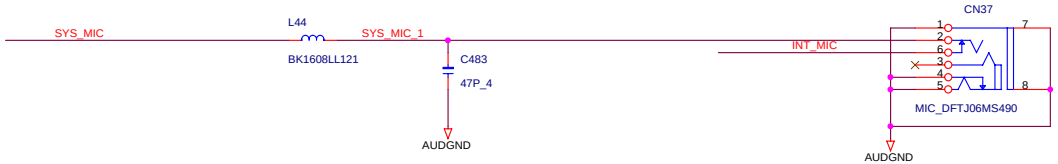

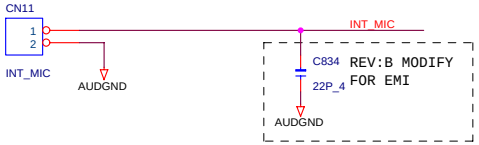

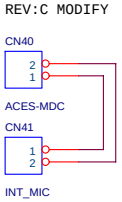

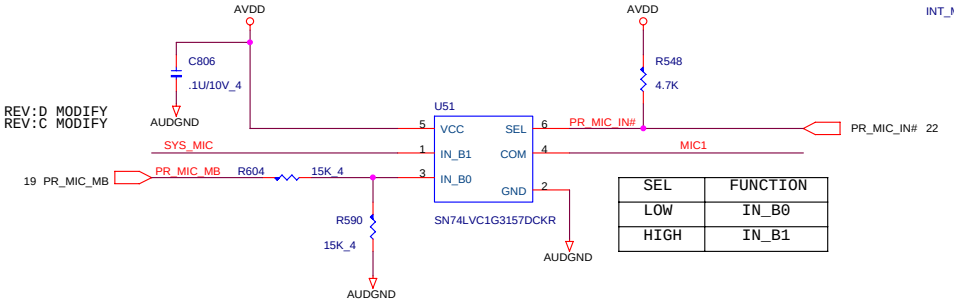

SEL	FUNCTION
LOW	IN_B0
HIGH	IN_B1

LINE IN

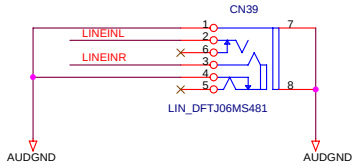

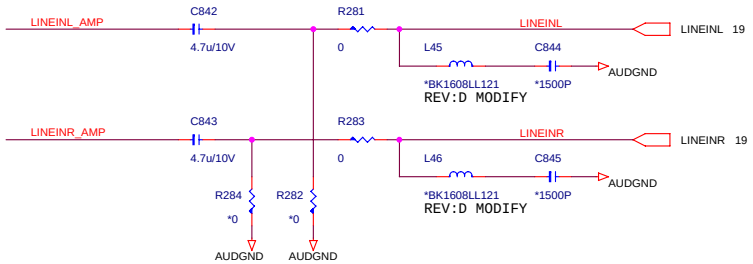

PROJECT : ZL1

Quanta Computer Inc.

Size	Document Number	Rev
	AUDIO	3A

Date: Monday, August 23, 2004 Sheet 18 of 34

GAIN1	SPKR MODE	HP MODE
0	10.5	3
1	9	0

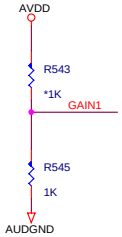

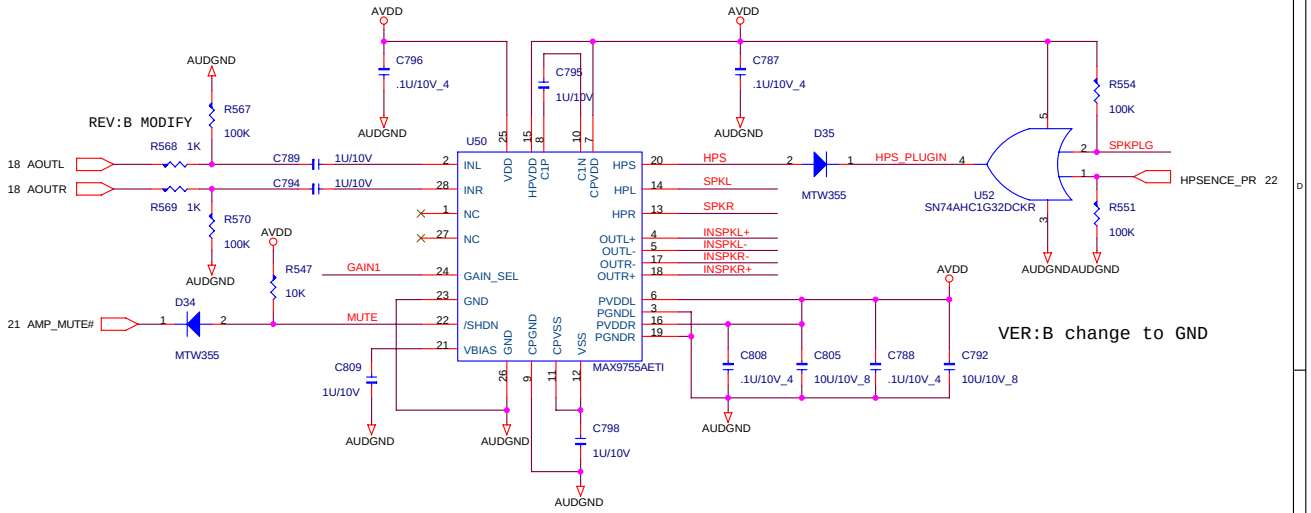

AMP POWER

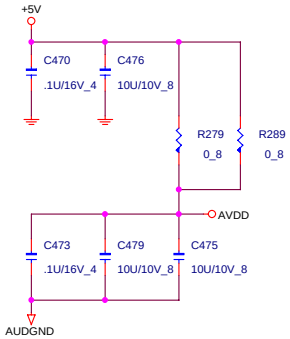

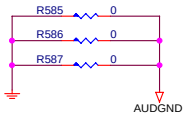

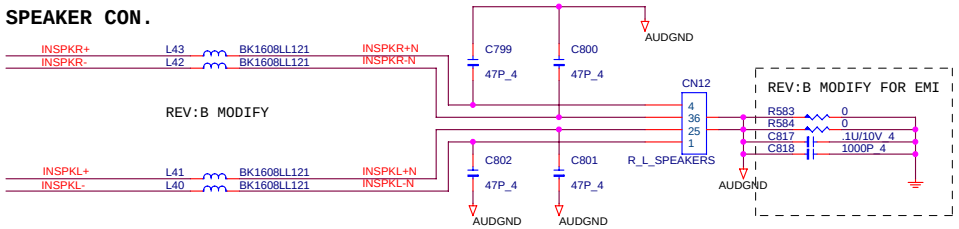

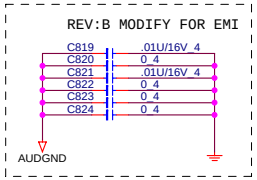

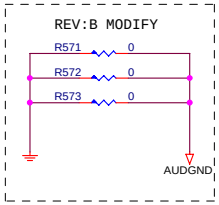

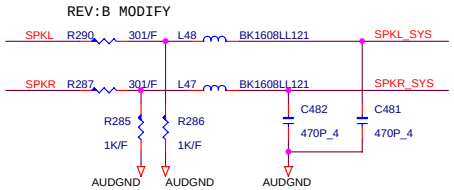

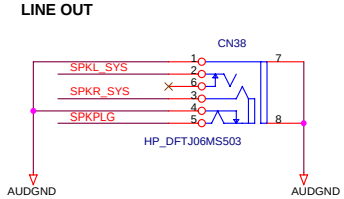

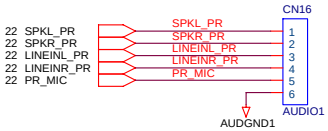

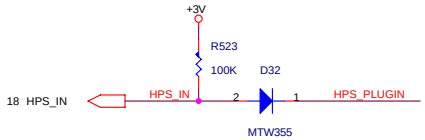

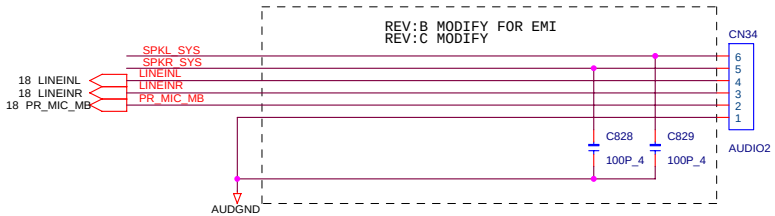

PROJECT : ZL1

Quanta Computer Inc.

Size	Document Number	Rev
	AUDIO AMP	3A

Date: Monday, August 23, 2004 Sheet 19 of 34

ID Select	: AD20
Interrupt Pin	: INTB# , INTC#
Request Indicate	: REQ1#
Grant Indicate	: GNT1#

MINI-PCI

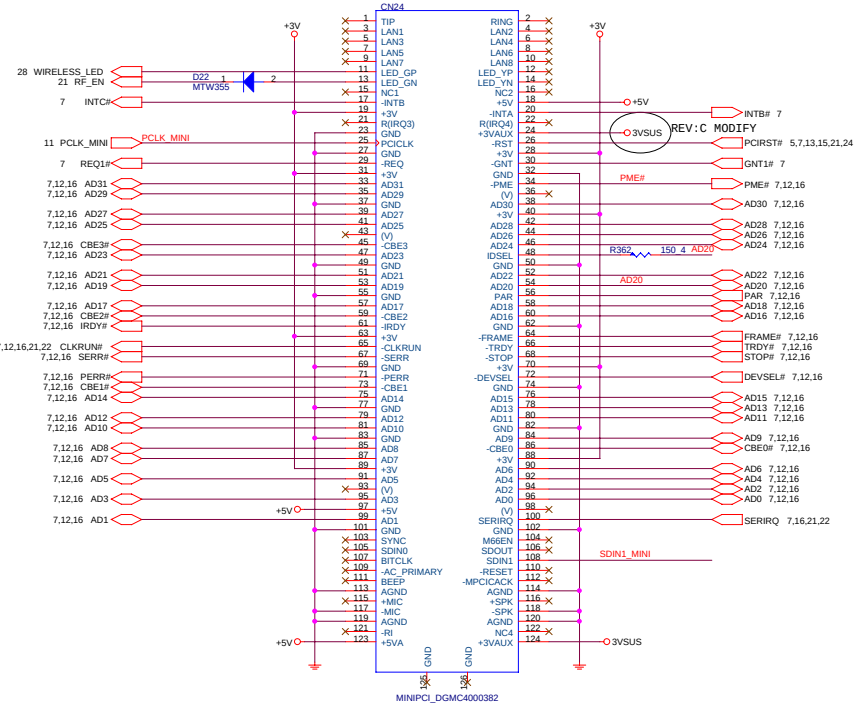

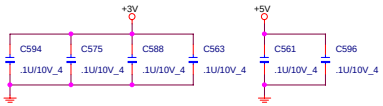

REV:D MODIFY

PAD27 PAD28 PAD31 PAD32 PAD33 PAD26 PAD34 PAD35 PAD36 PAD37

*EMIPAD142X91 EMIPAD142X91 *EMIPAD142X91 *EMIPAD142X91 EMIPAD142X91 *EMIPAD142X91 EMIPAD142X91 EMIPAD142X91 *EMIPAD142X91 EMIPAD142X91

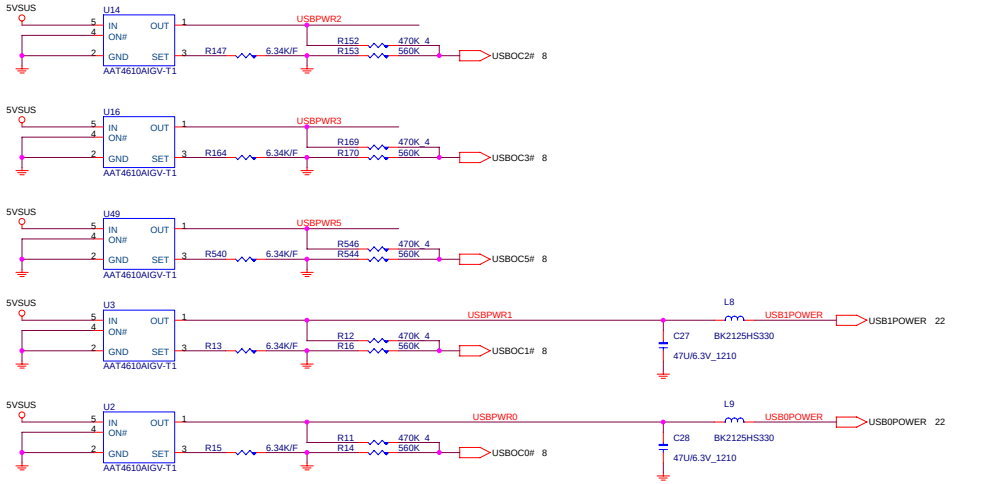

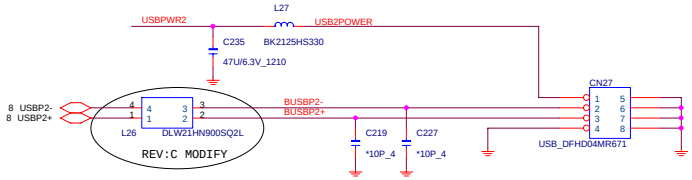

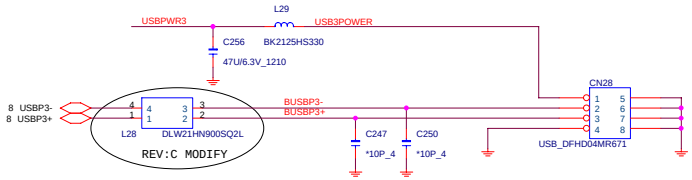

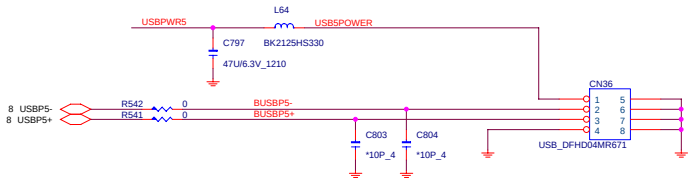

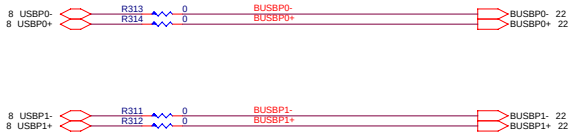

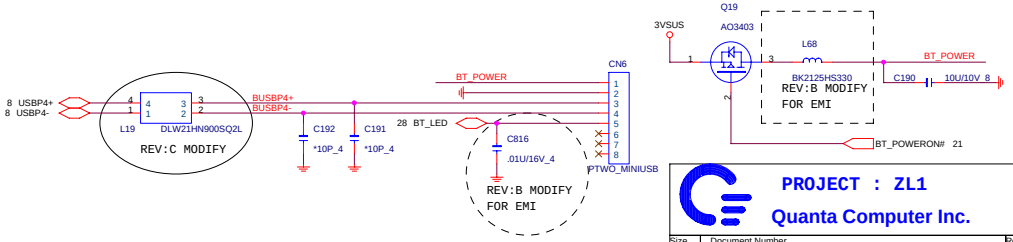

PROJECT : ZL1

Quanta Computer Inc.

Size	Document Number	Rev
	MINI PCI,USB	3A

Date: Monday, August 23, 2004 Sheet 20 of 34

LDRQ#(pin 8) internal is no use

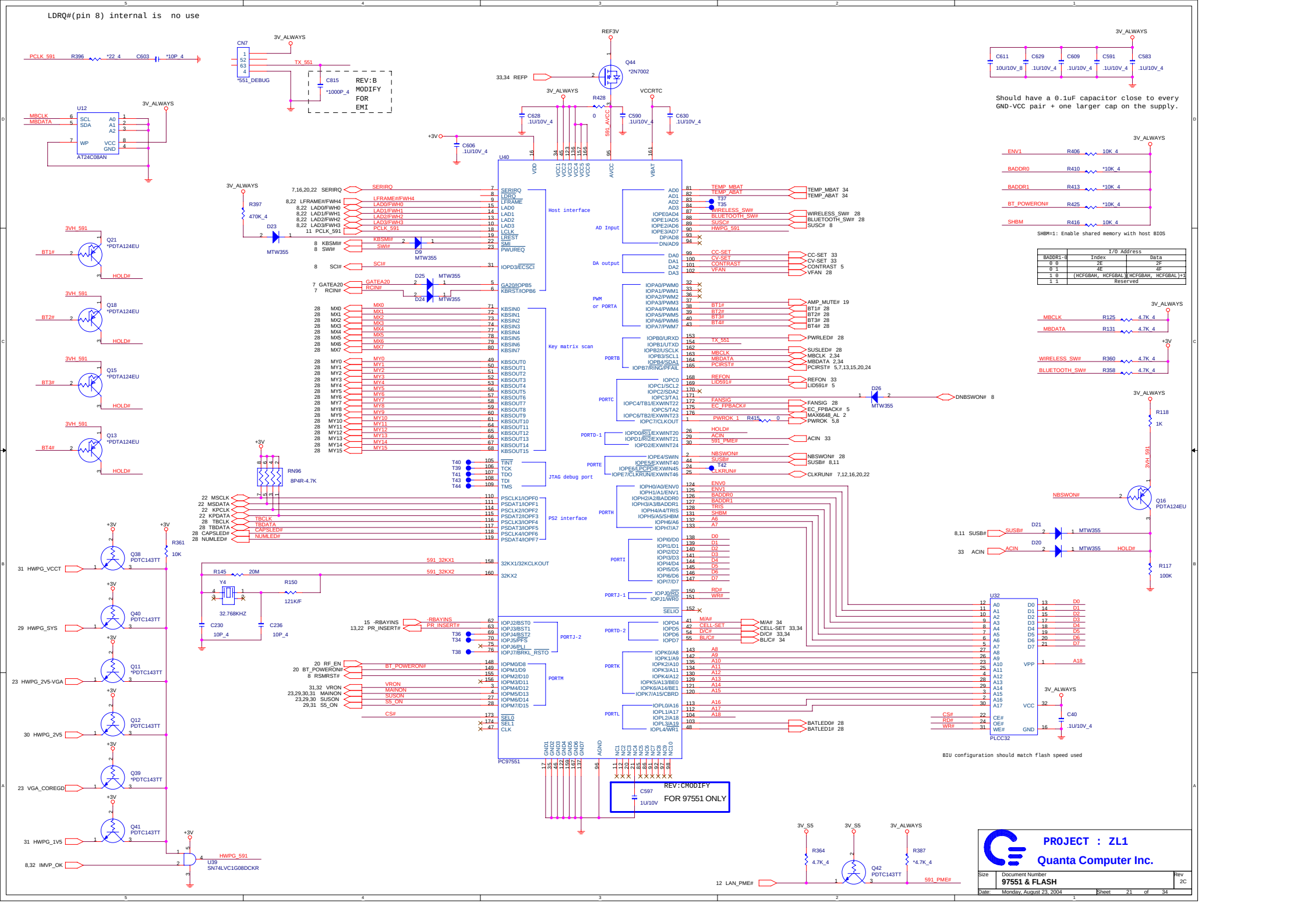

I/O Address		
BADDR1-0	Index	Data
0 0	2E	2F
0 1	4E	4F
1 0	(HCFGBAH, HCFGBAL)(HCFGBAH, HCFGBAL)+1	
1 1	Reserved	

PROJECT : ZL1

Quanta Computer Inc.

Size	Document Number	Rev
	97551 & FLASH	2C

Date: Monday, August 23, 2004 Sheet 21 of 34

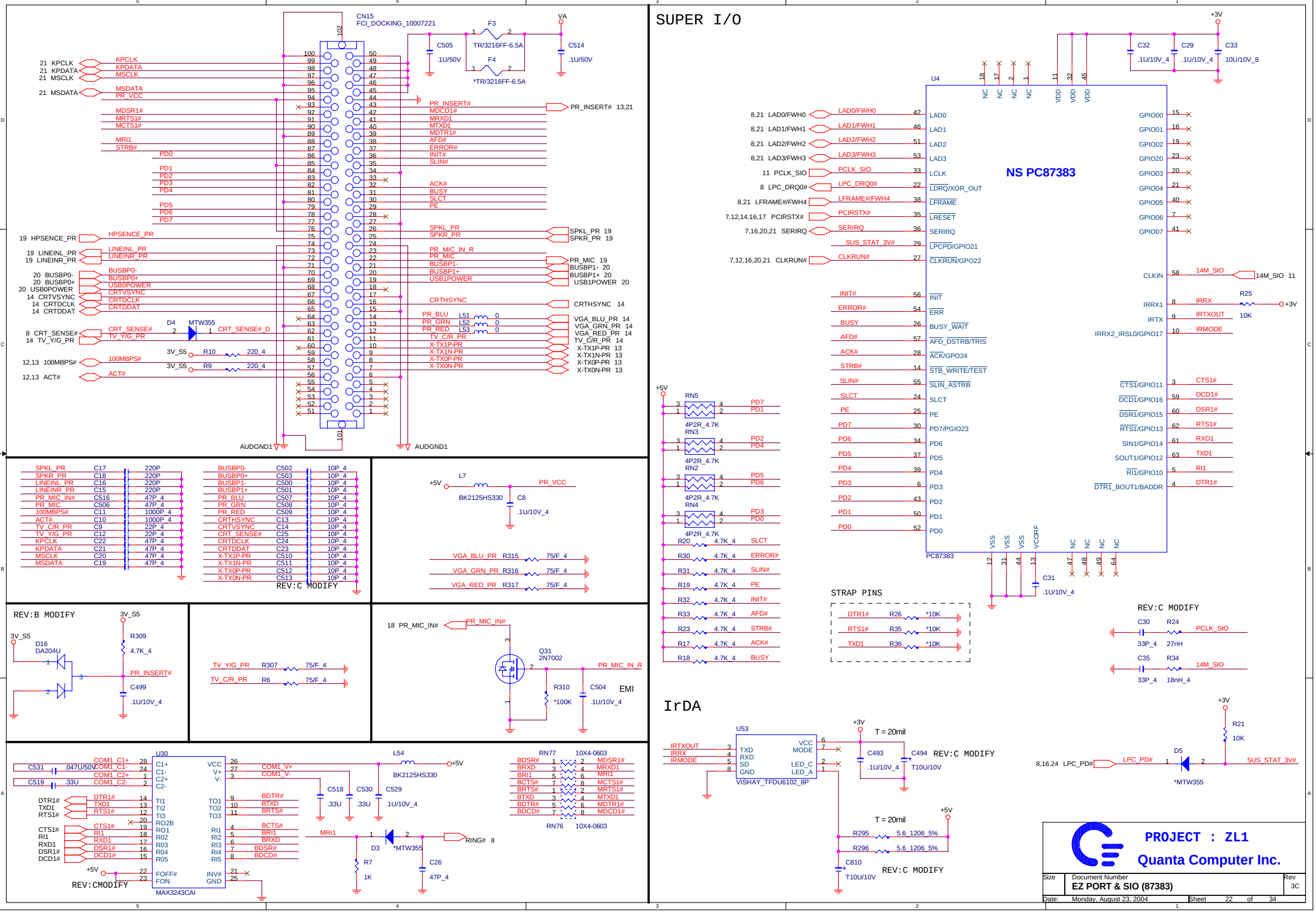
SUPER I/O
CN15
FCI_DOCKING_10007221
NS PC87383
PC87383
U4
IrDA
U53
VISHAY_TFDU6102_8P
U30
MAX3243CAI
REV:C MODIFY
REV:B MODIFY
REV:CMODIFY
STRAP PINS
EMI
PROJECT : ZL1
Quanta Computer Inc.
Size
Document Number
EZ PORT & SIO (87383)
Rev
3C
Date: Monday, August 23, 2004
Sheet 22 of 34

M11 Core & BATTERY

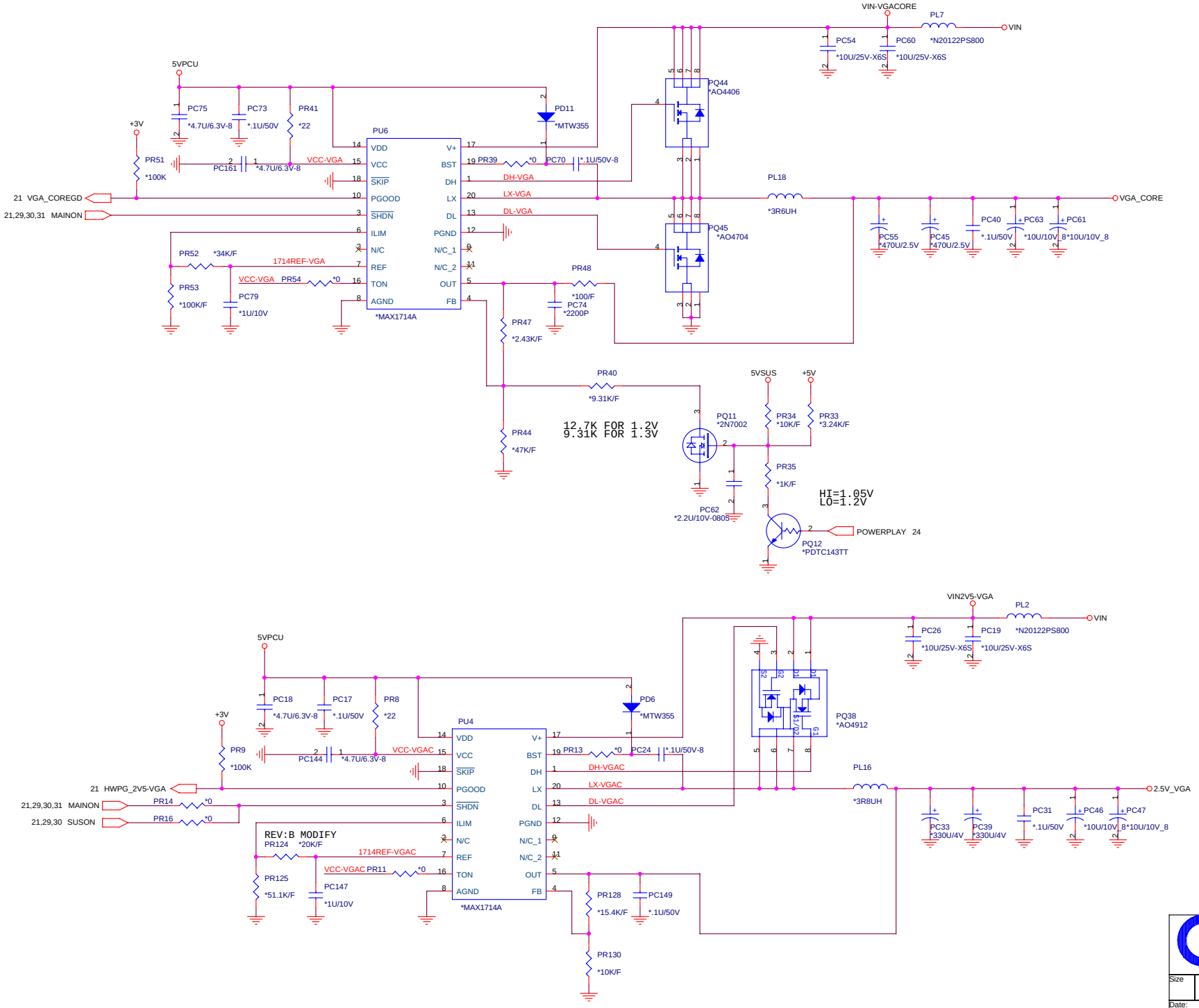

PROJECT : ZL1

Quanta Computer Inc.

Size	Document Number	Rev
	VGA CORE / VRAM POWER	3D

Date: Monday, August 23, 2004 Sheet 23 of 34

VGA(AGP,DISPLAY)

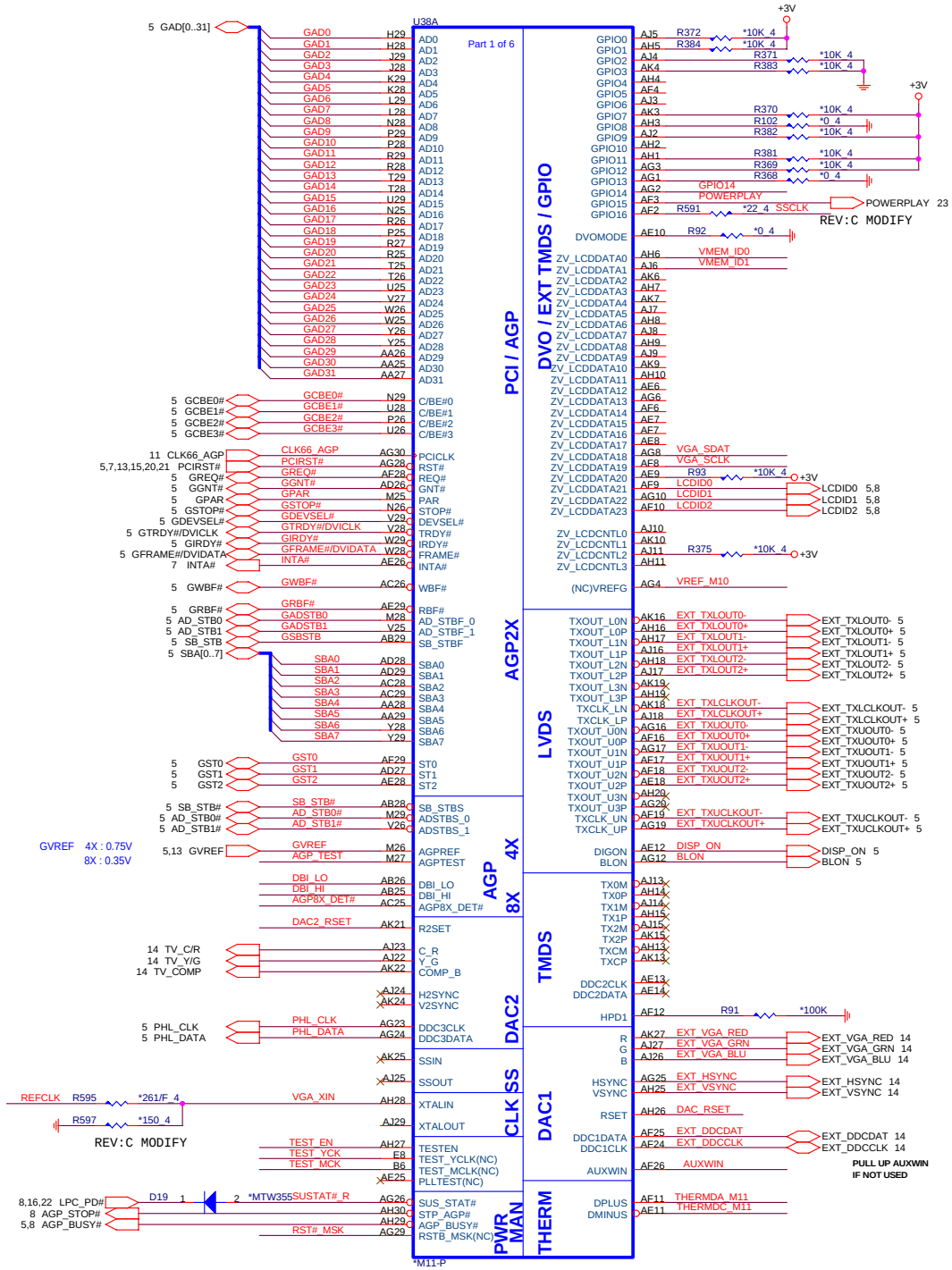

	32MB	64MB	128MB	128MB-Hynix
ID1	0	0	1	1
ID0	0	1	0	1

VRAM configuration

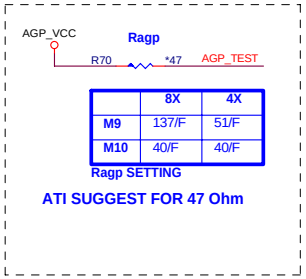

	8X	4X
M9	137/F	51/F
M10	40/F	40/F

Ragp SETTING

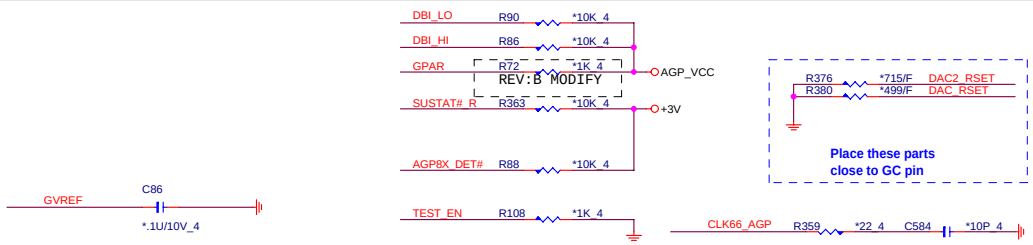

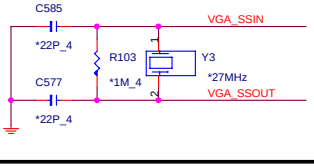

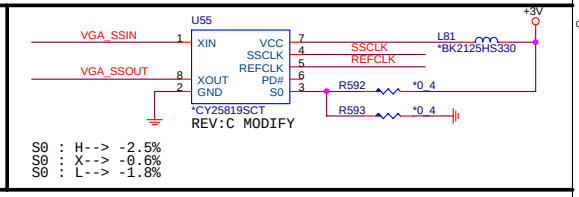

Thermal Monitor

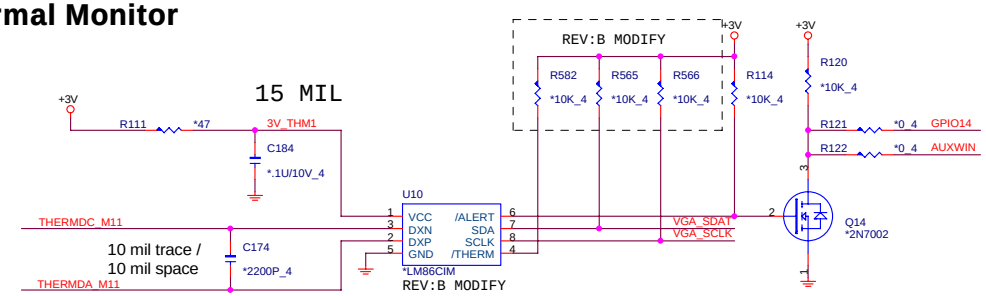

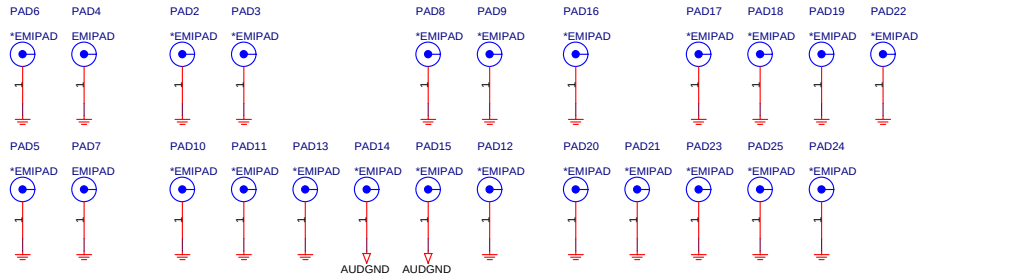

PROJECT : ZL1

Quanta Computer Inc.

Size	Document Number	Rev
	M11 (AGP,DISPLAY)	3C

Date: Monday, August 23, 2004 Sheet 24 of 34

VGA(MEMORY I/F)

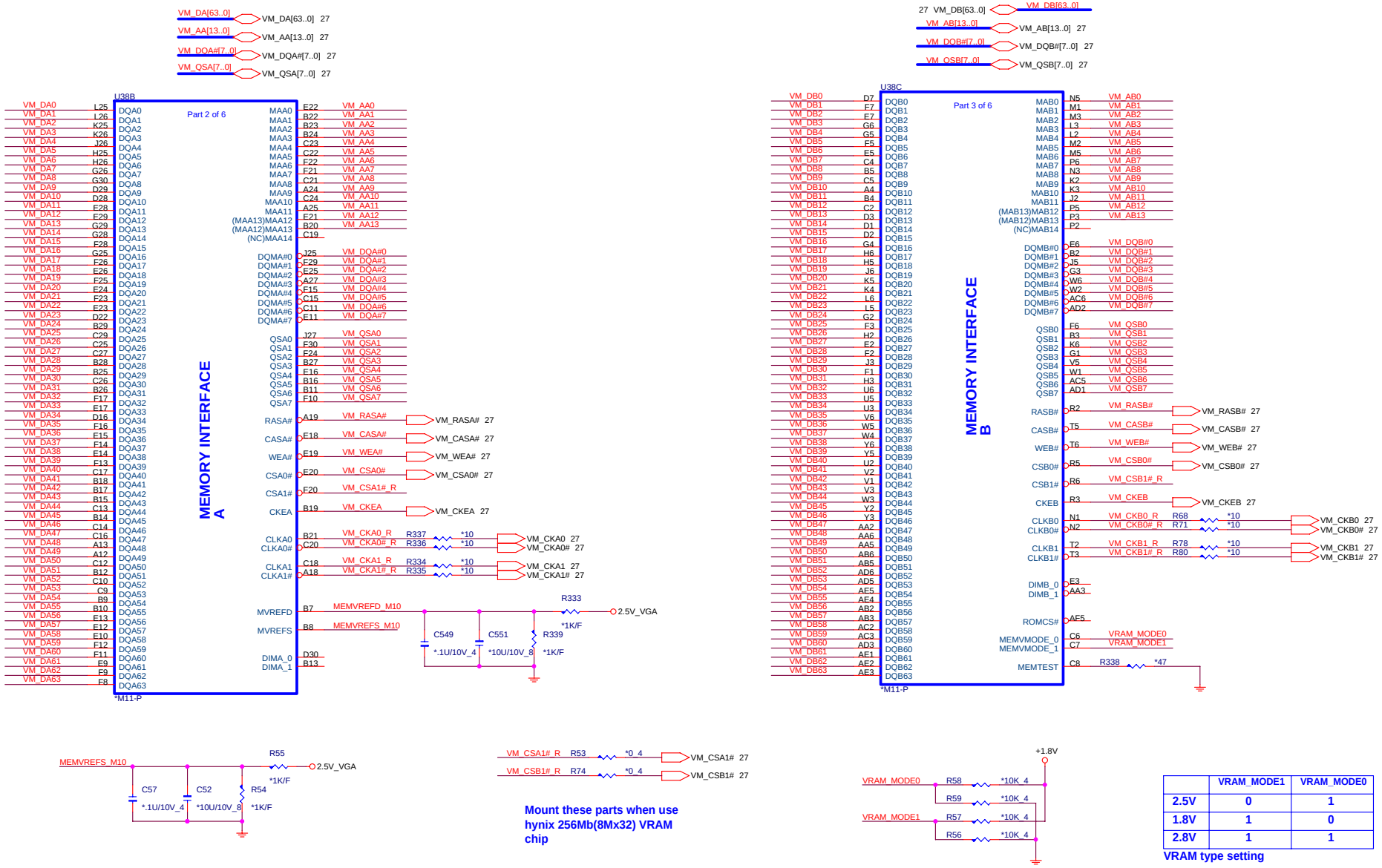

Mount these parts when use hynix 256Mb(8Mx32) VRAM chip

	VRAM_MODE1	VRAM_MODE0
2.5V	0	1
1.8V	1	0
2.8V	1	1

VRAM type setting

PROJECT : ZL1

Quanta Computer Inc.

Size	Document Number	Rev
	M11 (MEMORY I/F)	1A

Date: Monday, August 23, 2004 Sheet 25 of 34

VGA(POWER)

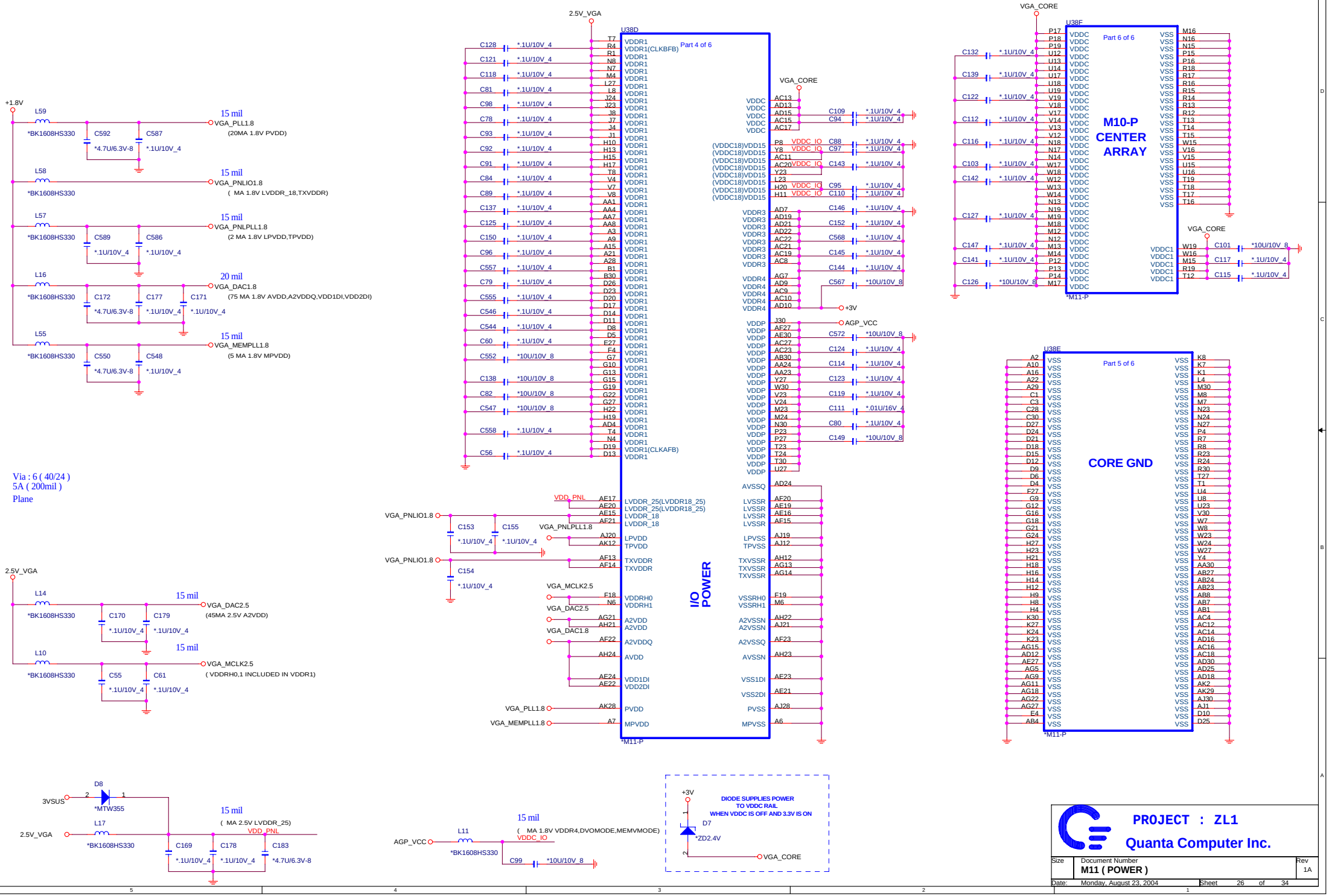

PROJECT : ZL1

Quanta Computer Inc.

Size	Document Number	Rev
	M11 (POWER)	1A

Date: Monday, August 23, 2004 Sheet 26 of 34

VGA(VRAM)

VRAM Channel A

VRAM Channel B

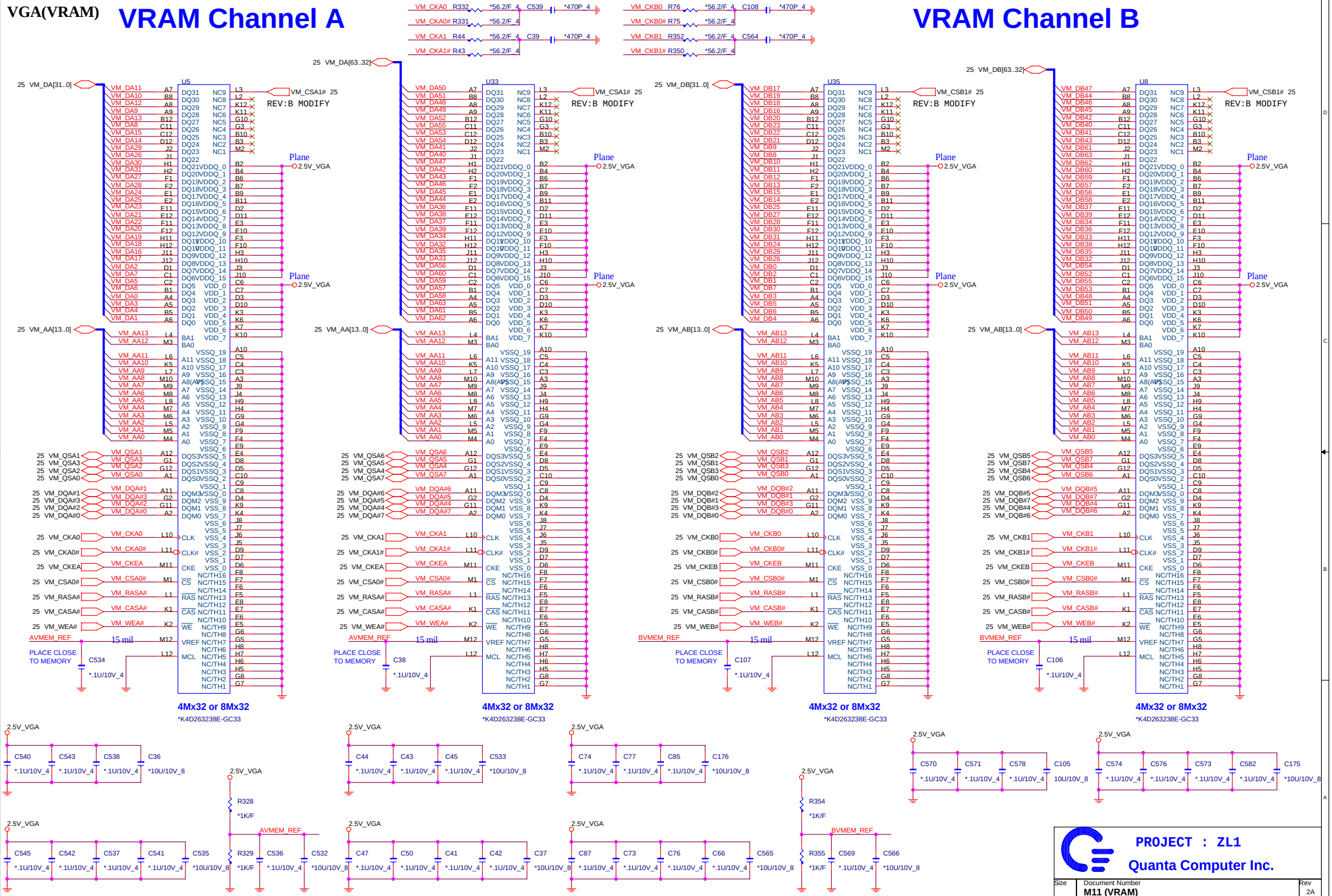

PROJECT : ZL1

Quanta Computer Inc.

Size	Document Number	Rev
	M11 (VRAM)	2A

Date: Monday, August 23, 2004 Sheet 27 of 34

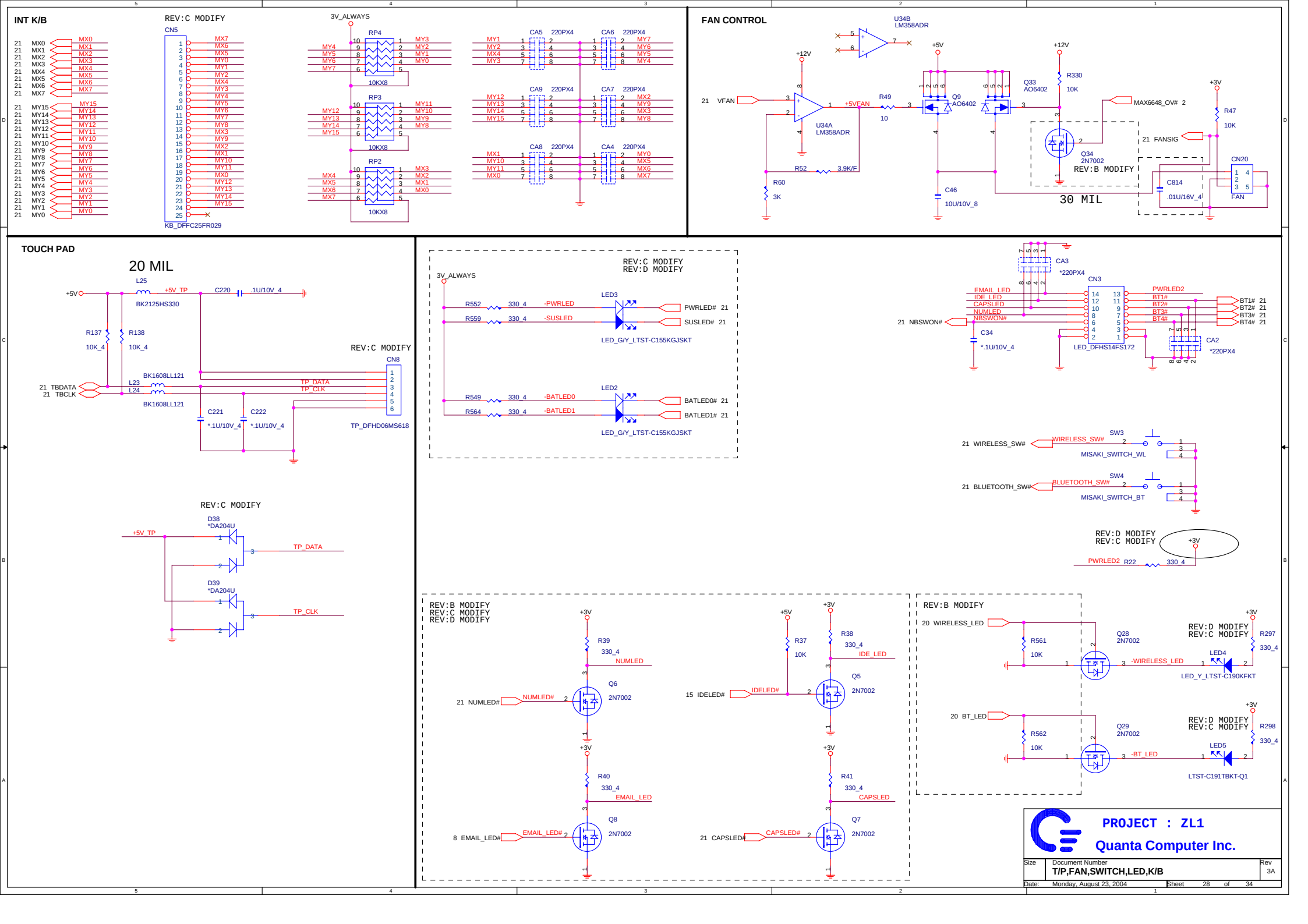
INT K/B
REV:C MODIFY
CN5
KB_DFFC25FR029
3V_ALWAYS
RP4
RP3
RP2
10KX8
CA5 220PX4
CA6 220PX4
CA9 220PX4
CA7 220PX4
CA8 220PX4
CA4 220PX4
FAN CONTROL
U34B LM358ADR
U34A LM358ADR
+12V
+5V
+5VFAN
21 VFAN
R49
10
Q9 AO6402
Q33 AO6402
R330
10K
MAX6648_OV# 2
+3V
R47
10K
21 FANSIG
Q34 2N7002
REV:B MODIFY
30 MIL
CN20
FAN
C814
.01U/16V_4
R52
3.9K/F
R60
3K
C46
10U/10V_8
TOUCH PAD
20 MIL
L25
BK2125HS330
+5V_TP
C220
.1U/10V_4
R137
10K_4
R138
10K_4
BK1608LL121
L23
L24
21 TBDATA
21 TBCLK
C221
*.1U/10V_4
C222
*.1U/10V_4
REV:C MODIFY
CN8
TP_DFHD06MS618
TP_DATA
TP_CLK
REV:C MODIFY
D38 *DA204U
D39 *DA204U
REV:C MODIFY
REV:D MODIFY
R552
330_4
-PWRLED
LED3
PWRLED# 21
R559
-SUSLED
SUSLED# 21
LED_G/Y_LTST-C155KGJSKT
R549
-BATLED0
LED2
BATLED0# 21
R564
-BATLED1
BATLED1# 21
CA3
*220PX4
CN3
EMAIL_LED
IDE_LED
CAPSLED
NUMLED
NBSWON#
21 NBSWON#
C34
*.1U/10V_4
LED_DFHS14FS172
PWRLED2
BT1#
BT2#
BT3#
BT4#
BT1# 21
BT2# 21
BT3# 21
BT4# 21
CA2
*220PX4
21 WIRELESS_SW#
WIRELESS_SW#
SW3
MISAKI_SWITCH_WL
21 BLUETOOTH_SW#
BLUETOOTH_SW#
SW4
MISAKI_SWITCH_BT
REV:D MODIFY
REV:C MODIFY
PWRLED2
R22
330_4
REV:B MODIFY
REV:C MODIFY
REV:D MODIFY
R39
330_4
NUMLED
Q6 2N7002
21 NUMLED#
R37
10K
R38
330_4
IDE_LED
Q5 2N7002
15 IDELED#
R40
330_4
EMAIL_LED
Q8 2N7002
8 EMAIL_LED#
R41
330_4
CAPSLED
Q7 2N7002
21 CAPSLED#
REV:B MODIFY
20 WIRELESS_LED
R561
10K
Q28 2N7002
-WIRELESS_LED
REV:D MODIFY
REV:C MODIFY
R297
330_4
LED4
LED_Y_LTST-C190KFKT
20 BT_LED
R562
10K
Q29 2N7002
-BT_LED
R298
330_4
LED5
LTST-C191TBKT-Q1
PROJECT : ZL1
Quanta Computer Inc.
Size
Document Number
T/P,FAN,SWITCH,LED,K/B
Rev
3A
Date: Monday, August 23, 2004
Sheet 28 of 34

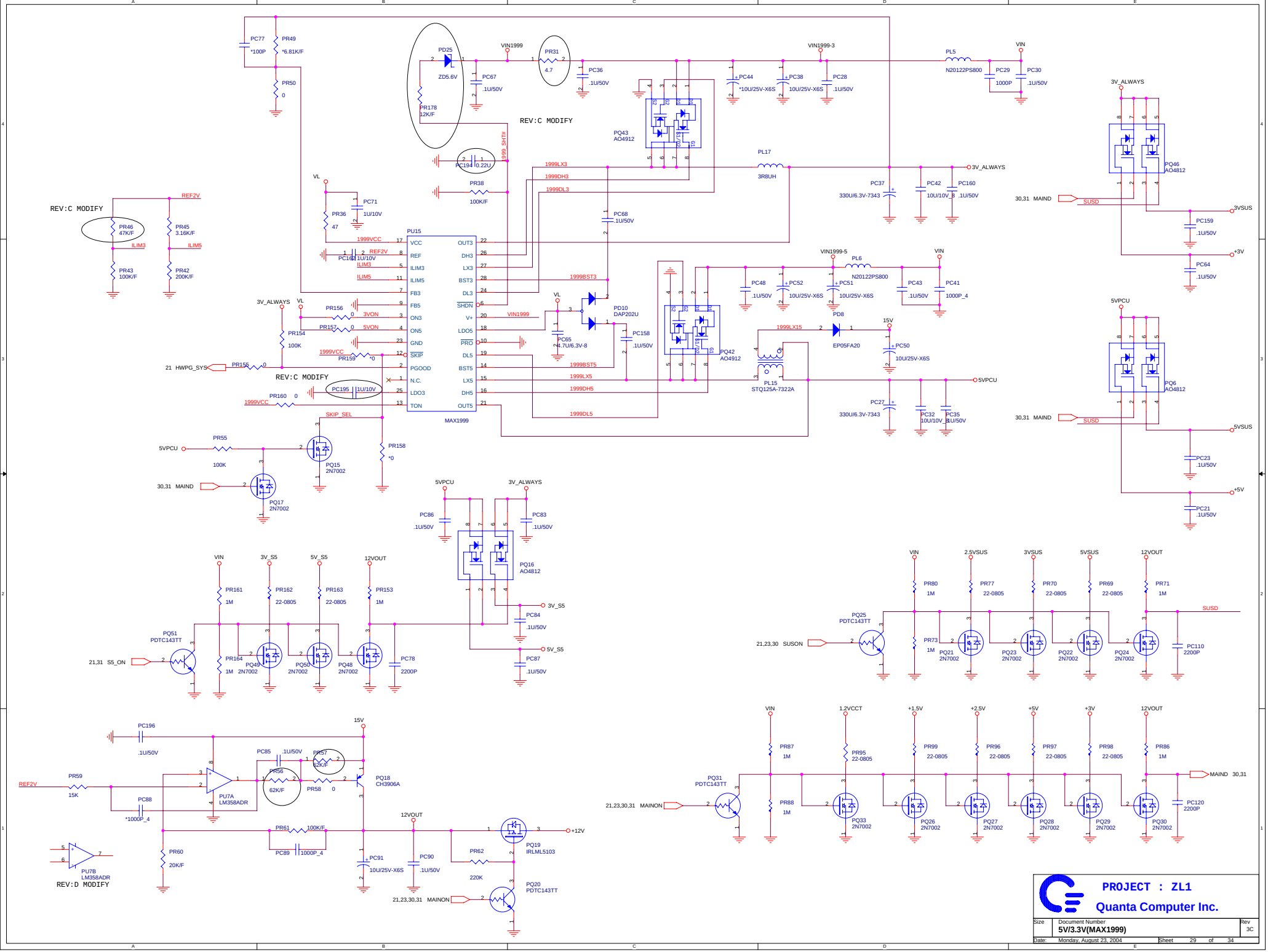
PU15
MAX1999
VCC
REF
ILIM3
ILIM5
FB3
FB5
ON3
ON5
GND
SKIP
PGOOD
N.C.
LDO3
TON
OUT3
DH3
LX3
BST3
DL3
SHDN
V+
LDO5
PRO
DL5
BST5
LX5
DH5
OUT5
REV:C MODIFY
REV:D MODIFY
PROJECT : ZL1
Quanta Computer Inc.
Size
Document Number
5V/3.3V(MAX1999)
Rev
3C
Date: Monday, August 23, 2004
Sheet 29 of 34

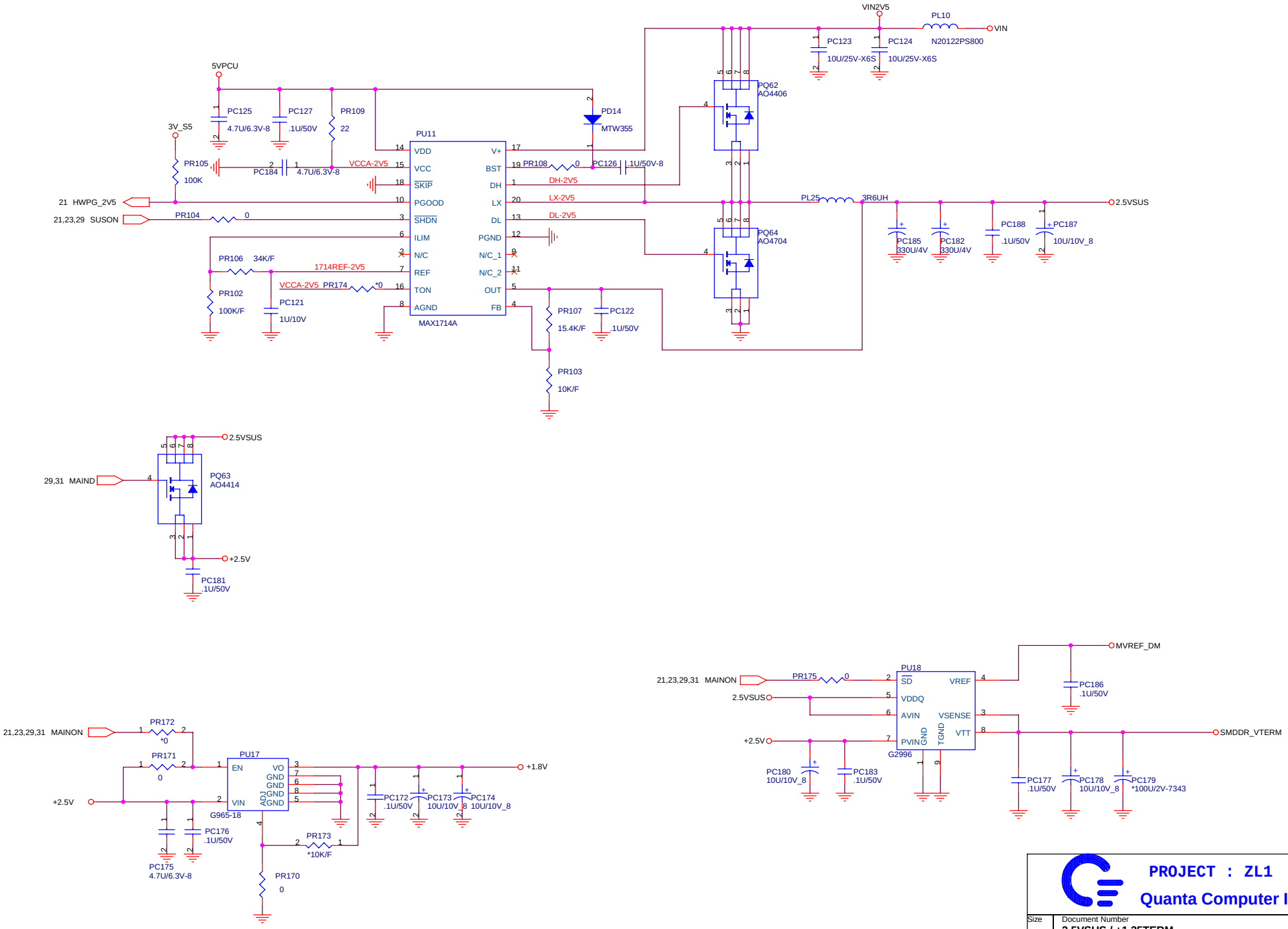

PROJECT : ZL1

Quanta Computer Inc.

Size	Document Number	Rev
	2.5VSUS / +1.25TERM	1A

Date: Monday, August 23, 2004 Sheet 30 of 34

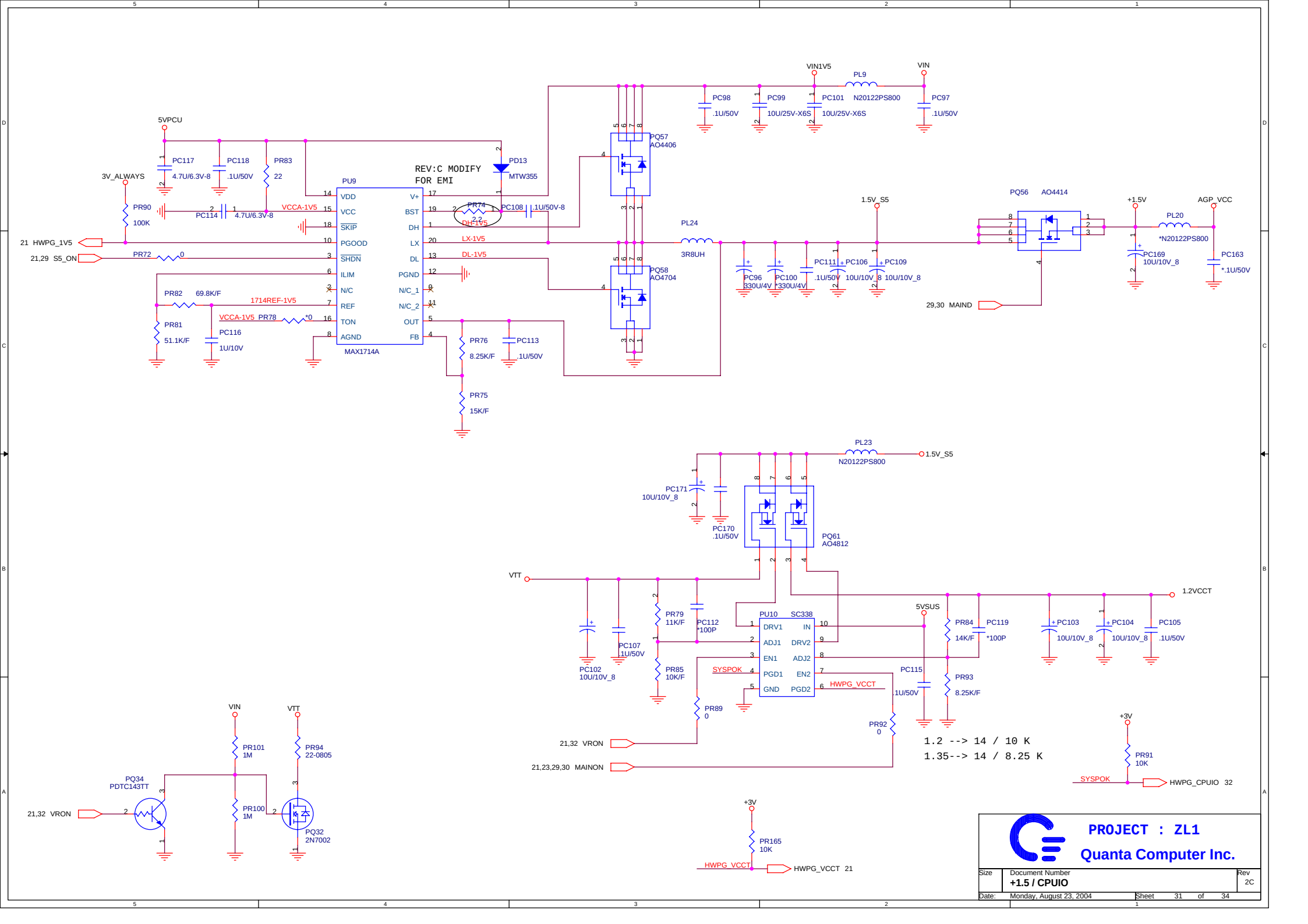
5VPCU
3V_ALWAYS
PC117 4.7U/6.3V-8
PC118 .1U/50V
PR83 22
PR90 100K
PC114 4.7U/6.3V-8
VCCA-1V5
21 HWPG_1V5
21,29 S5_ON
PR72 0
PR82 69.8K/F
1714REF-1V5
PR81 51.1K/F
PC116 1U/10V
VCCA-1V5 PR78 *0
PU9
MAX1714A
VDD
VCC
SKIP
PGOOD
SHDN
ILIM
N/C
REF
TON
AGND
V+
BST
DH
LX
DL
PGND
N/C_1
N/C_2
OUT
FB
REV:C MODIFY
FOR EMI
PD13 MTW355
PR74 2.2
DH-1V5
PC108 .1U/50V-8
LX-1V5
DL-1V5
PR76 8.25K/F
PC113 .1U/50V
PR75 15K/F
PQ57 AO4406
PQ58 AO4704
PL24 3R8UH
PC98 .1U/50V
PC99 10U/25V-X6S
PC101 10U/25V-X6S
VIN1V5
PL9 N20122PS800
VIN
PC97 .1U/50V
1.5V_S5
PC96 330U/4V
PC100 330U/4V
PC111 .1U/50V
PC106 10U/10V_8
PC109 10U/10V_8
PQ56 AO4414
29,30 MAIND
+1.5V
PL20 *N20122PS800
AGP_VCC
PC169 10U/10V_8
PC163 *.1U/50V
PL23 N20122PS800
1.5V_S5
PC171 10U/10V_8
PC170 .1U/50V
PQ61 AO4812
VTT
PC102 10U/10V_8
PC107 .1U/50V
PR79 11K/F
PC112 *100P
PR85 10K/F
PU10 SC338
DRV1
ADJ1
EN1
PGD1
GND
IN
DRV2
ADJ2
EN2
PGD2
SYSPOK
HWPG_VCCT
PR89 0
21,32 VRON
21,23,29,30 MAINON
5VSUS
PR84 14K/F
PC119 *100P
PC115 .1U/50V
PR93 8.25K/F
PR92 0
1.2VCCT
PC103 10U/10V_8
PC104 10U/10V_8
PC105 .1U/50V
1.2 --> 14 / 10 K
1.35--> 14 / 8.25 K
+3V
PR91 10K
SYSPOK
HWPG_CPUIO 32
VIN
VTT
PR101 1M
PR94 22-0805
PQ34 PDTC143TT
21,32 VRON
PR100 1M
PQ32 2N7002
+3V
PR165 10K
HWPG_VCCT
HWPG_VCCT 21
PROJECT : ZL1
Quanta Computer Inc.
Size
Document Number
+1.5 / CPUIO
Rev
2C
Date: Monday, August 23, 2004
Sheet 31 of 34

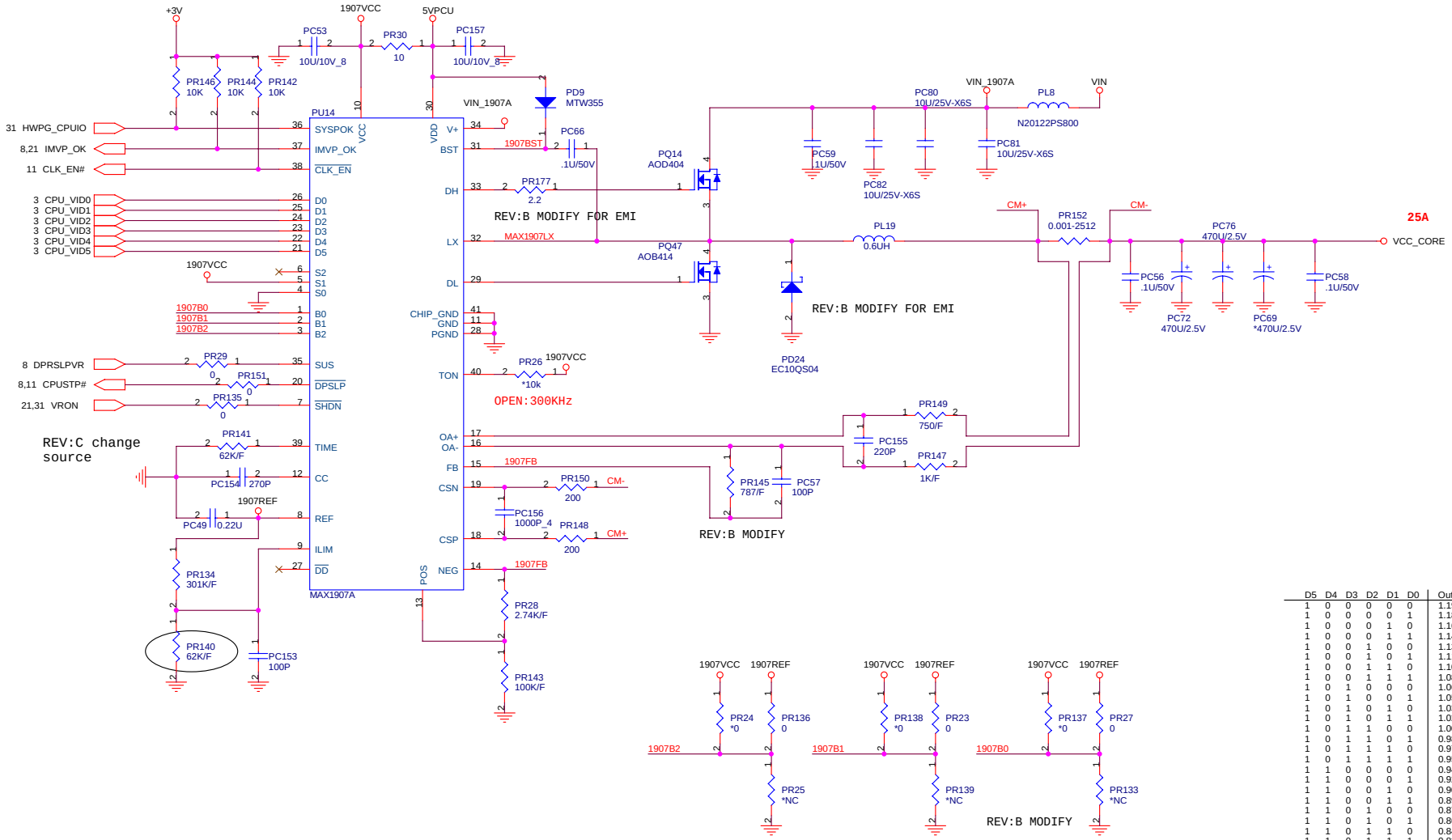

D5	D4	D3	D2	D1	D0	Output	D5	D4	D3	D2	D1	D0	Output
1	0	0	0	0	0	1.196V	0	0	0	0	0	0	1.708V
1	0	0	0	0	1	1.180V	0	0	0	0	0	1	1.692V
1	0	0	0	1	0	1.164V	0	0	0	0	1	0	1.676V
1	0	0	0	1	1	1.148V	0	0	0	0	1	1	1.660V
1	0	0	1	0	0	1.132V	0	0	0	1	0	0	1.644V
1	0	0	1	0	1	1.116V	0	0	0	1	0	1	1.628V
1	0	0	1	1	0	1.100V	0	0	0	1	1	0	1.612V
1	0	0	1	1	1	1.084V	0	0	0	1	1	1	1.596V
1	0	1	0	0	0	1.068V	0	0	1	0	0	0	1.580V
1	0	1	0	0	1	1.052V	0	0	1	0	0	1	1.564V
1	0	1	0	1	0	1.036V	0	0	1	0	1	0	1.548V
1	0	1	0	1	1	1.020V	0	0	1	0	1	1	1.532V
1	0	1	1	0	0	1.004V	0	0	1	1	0	0	1.516V
1	0	1	1	0	1	0.988V	0	0	1	1	0	1	1.500V
1	0	1	1	1	0	0.972V	0	0	1	1	1	0	1.484V
1	0	1	1	1	1	0.956V	0	0	1	1	1	1	1.468V
1	1	0	0	0	0	0.940V	0	1	0	0	0	0	1.452V
1	1	0	0	0	1	0.924V	0	1	0	0	0	1	1.436V
1	1	0	0	1	0	0.908V	0	1	0	0	1	0	1.420V
1	1	0	0	1	1	0.892V	0	1	0	0	1	1	1.404V
1	1	0	1	0	0	0.876V	0	1	0	1	0	0	1.388V
1	1	0	1	0	1	0.860V	0	1	0	1	0	1	1.372V
1	1	0	1	1	0	0.844V	0	1	0	1	1	0	1.356V
1	1	0	1	1	1	0.828V	0	1	0	1	1	1	1.340V
1	1	1	0	0	0	0.812V	0	1	1	0	0	0	1.324V
1	1	1	0	0	1	0.796V	0	1	1	0	0	1	1.308V
1	1	1	0	1	0	0.780V	0	1	1	0	1	0	1.292V
1	1	1	0	1	1	0.764V	0	1	1	0	1	1	1.276V
1	1	1	1	0	0	0.748V	0	1	1	1	0	0	1.260V
1	1	1	1	0	1	0.732V	0	1	1	1	0	1	1.244V
1	1	1	1	1	0	0.716V	0	1	1	1	1	0	1.228V
1	1	1	1	1	1	0.700V	0	1	1	1	1	1	1.212V

SUSPEND MODE (SUS=HIGH)

S2	S1	S0	Output
OPEN	VCC	GND	0.748V

VCC_BOOT

B2	B1	B0	Output
GND	GND	GND	1.708V
REF	REF	REF	1.372V
OPEN	OPEN	OPEN	1.036V
VCC	VCC	VCC	0.700V
REF	VCC	VCC	1.212V

PROJECT : ZL1

Quanta Computer Inc.

Size	Document Number	Rev
	CPU CORE (MAX1907)	2C

Date: Monday, August 23, 2004 Sheet 32 of 34

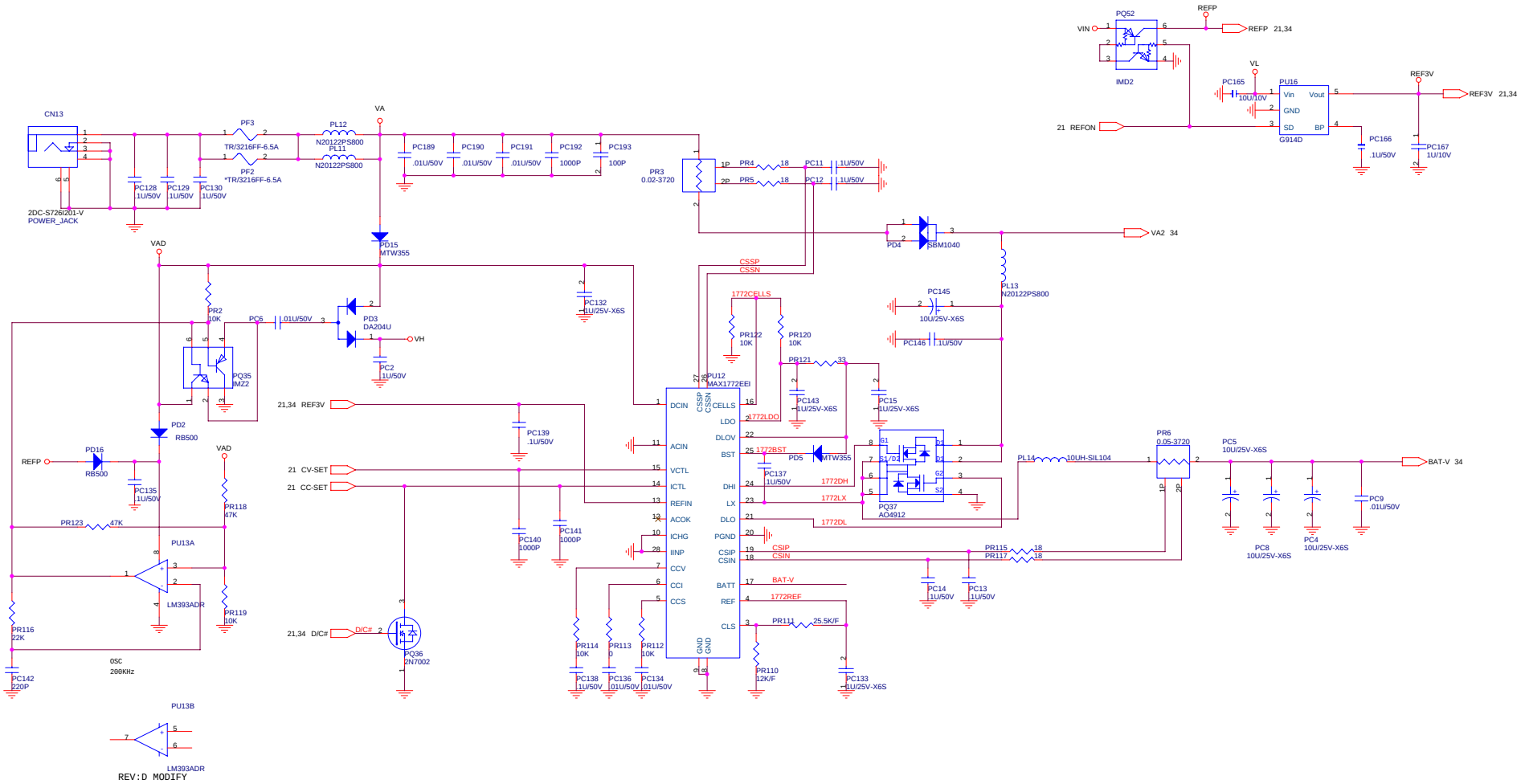

PROJECT : ZL1

Quanta Computer Inc.

Size	Document Number	Rev
	BATTERY CHARGER	3A

Date: Monday, August 23, 2004 Sheet 33 of 34

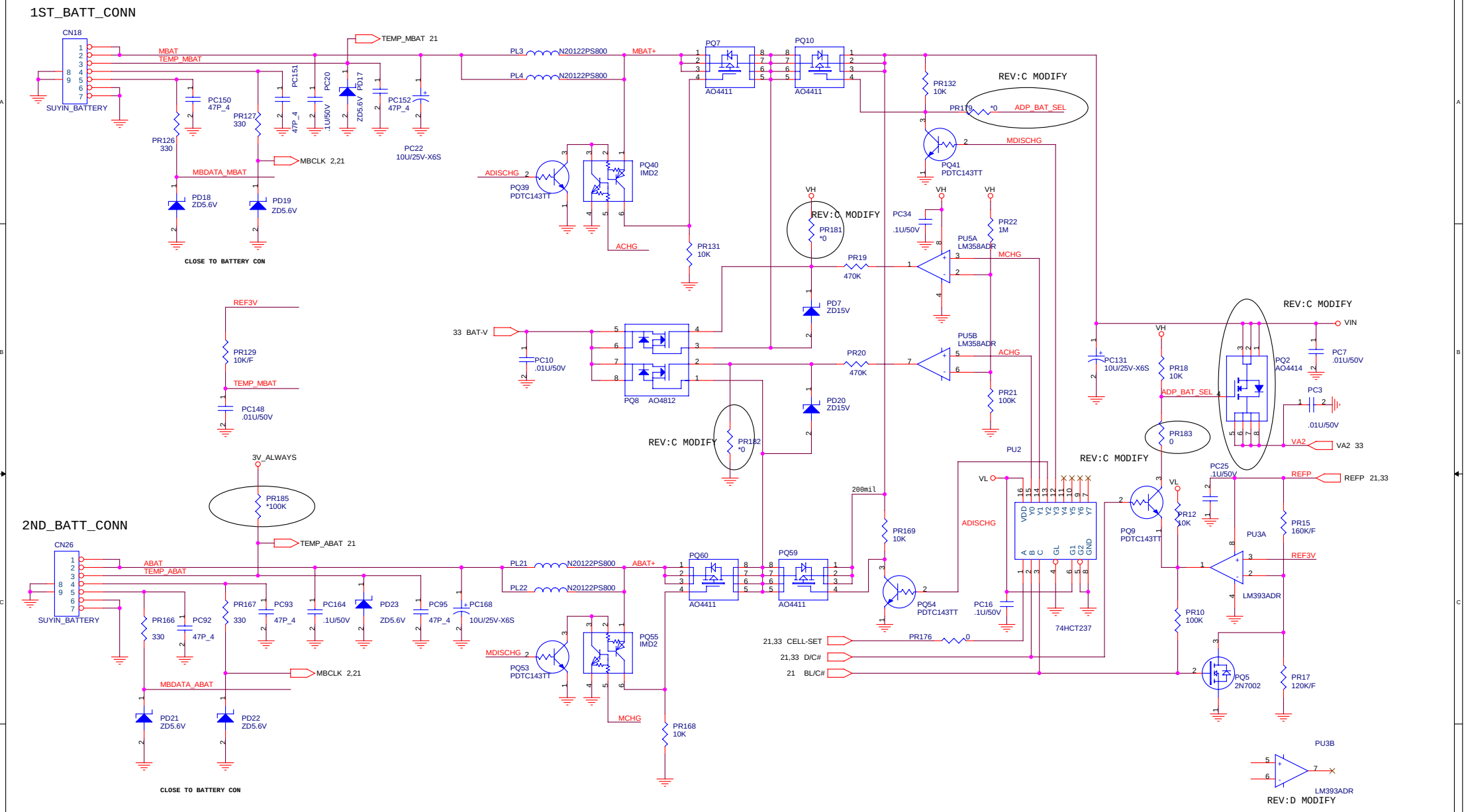

SEL	FUNCTION
LOW	IN_B0
HIGH	IN_B1

PROJECT : ZL1

Quanta Computer Inc.

Size	Document Number	Rev
	BATTERY SELECT	3A

Date: Monday, August 23, 2004 Sheet 34 of 34